A Practical Introduction to Quantum Computing: From Qubits to Quantum Machine Learning and Beyond

Elías F. Combarro
combarro@gmail.com

CERN openlab (Geneva, Switzerland) - University of Oviedo (Oviedo, Spain)

CERN - November/December 2020

Part I

Introduction: quantum computing... the end of the world as we know it?

I, for one, welcome our new quantum overlords

NEWS QUANTUM PHYSICS

Google officially lays claim to quantum supremacy

A quantum computer reportedly beat the most powerful supercomputers at one type of calculation

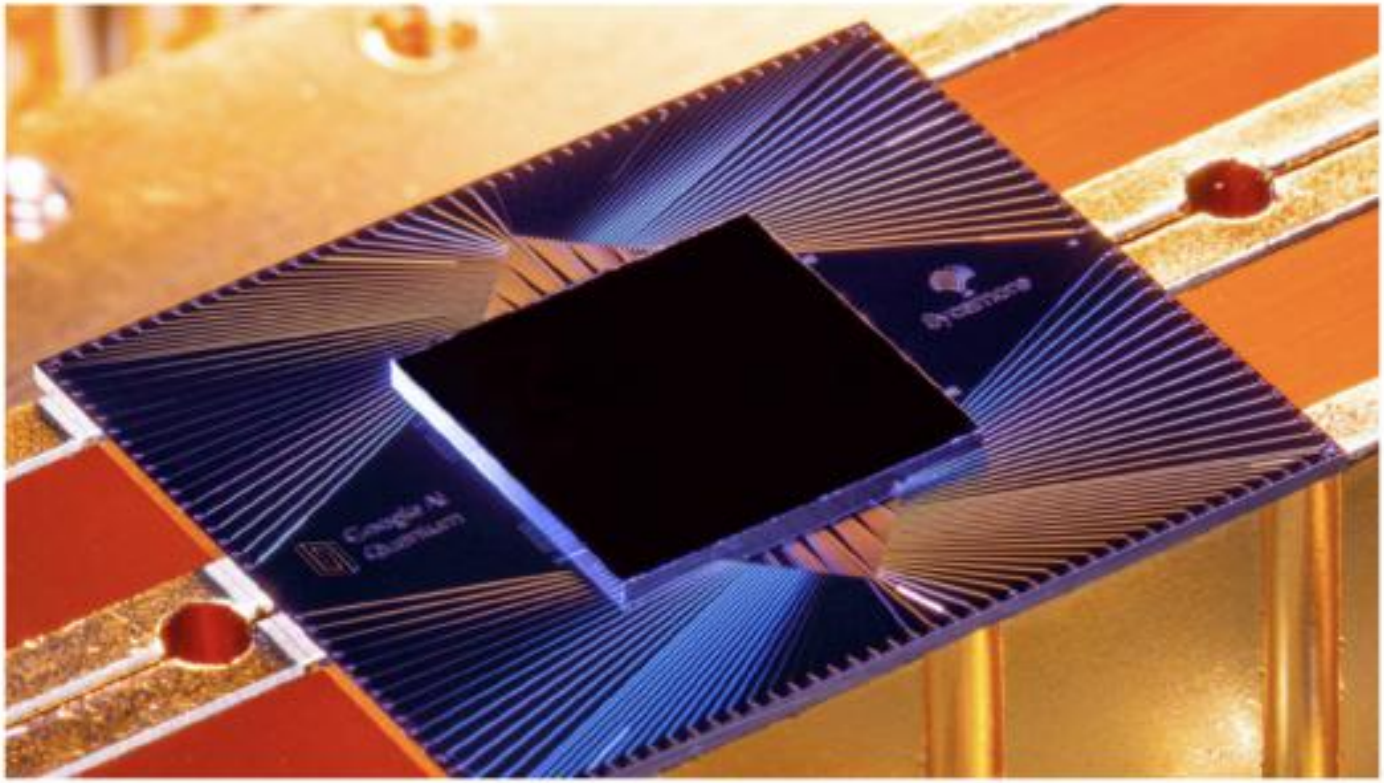

Image credits: sciencenews.org

Philosophy of the course

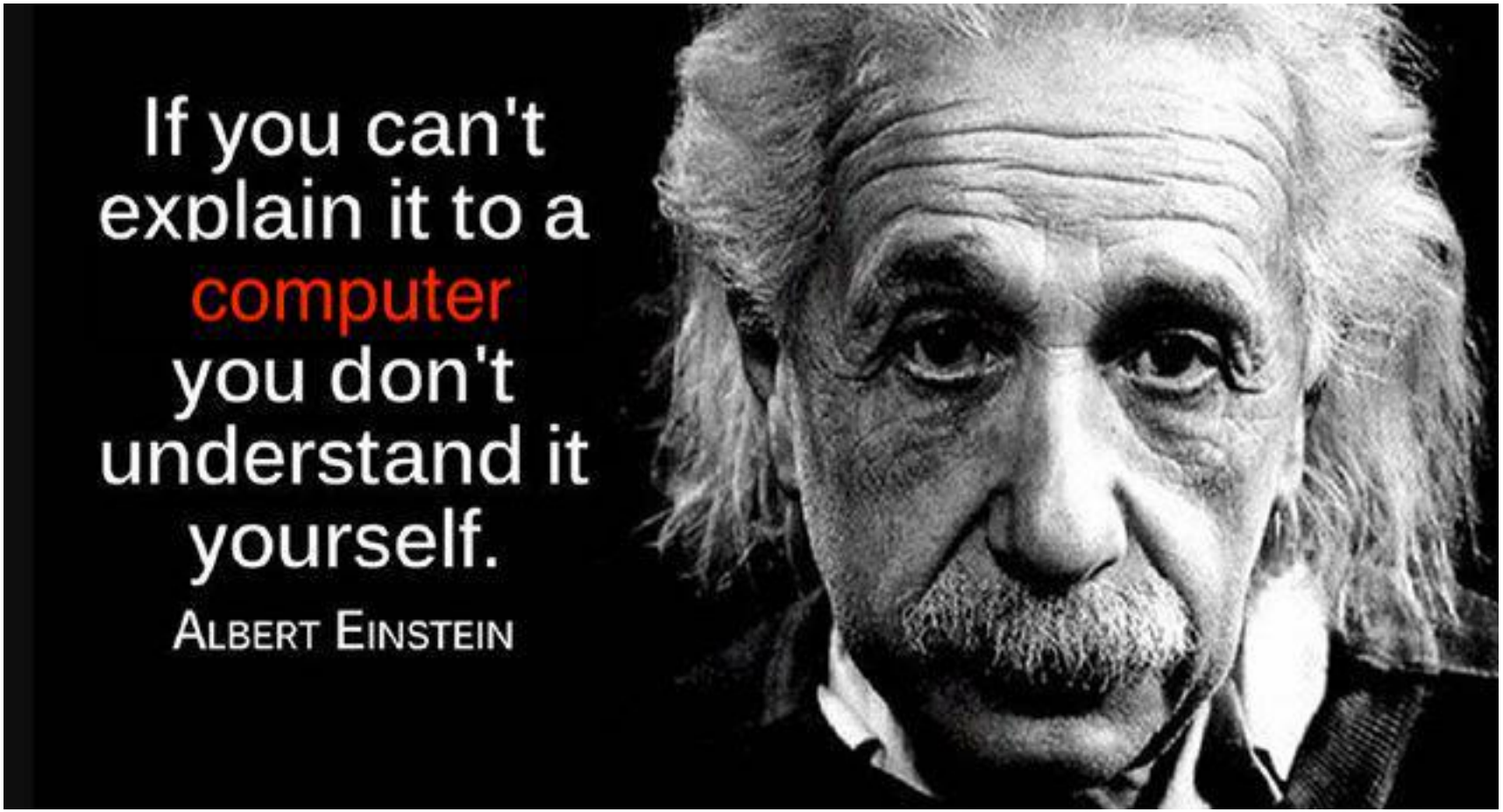

Image credits: Modified from an Instagram image by Bob MacGuffie

Tools and resources

- Jupyter Notebooks
  - Web application to create and execute notebooks that include code, images, text and formulas
  - They can be used locally (Anaconda) or in the cloud (mybinder.org, Google Colab...)
- IBM Quantum Experience
  - Free online access to quantum simulators (up to 32 qubits) and **actual quantum computers** (1, 5 and 15 qubits) with different topologies
  - Programmable with a visual interface and via different languages (python, qasm, Jupyter Notebooks)
  - Launched in May 2016
  - https://quantum-computing.ibm.com/

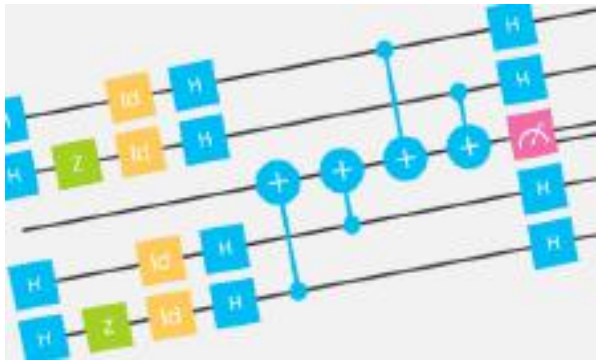

Image credits: IBM

Tools and resources (2)

- Quirk
  - Online simulator (up to 16 qubits)
  - Lots of different gates and visualization options
  - http://algassert.com/quirk
- D-Wave Leap
  - Access to D-Wave quantum computers
  - Ocean: python library for quantum annealing
  - Problem specific (QUBO, Ising model...)
  - https://www.dwavesys.com/take-leap

The shape of things to come

Image credits: Created with wordclouds.com

What is quantum computing?

Quantum computing

Quantum computing is a computing paradigm that exploits quantum mechanical properties (superposition, entanglement, interference...) of matter in order to do calculations

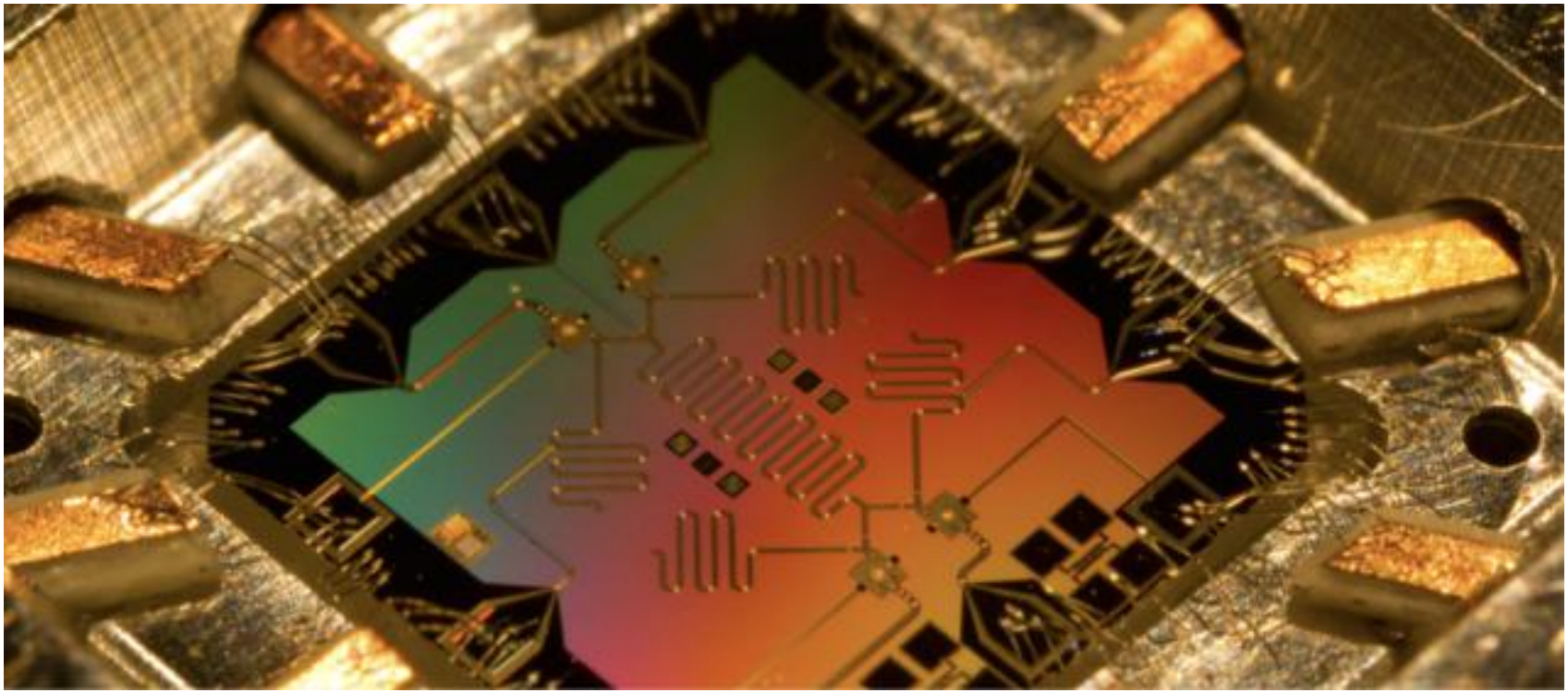

Image credits: Erik Lucero

Models of quantum computing

- There are several models of quantum computing (they're all equivalent)
  - Quantum Turing machines
  - **Quantum circuits**
  - Measurement based quantum computing (MBQC)
  - Adiabatic quantum computing
  - Topological quantum computing
- Regarding their **computational capabilities**, they are equivalent to classical models (Turing machines)

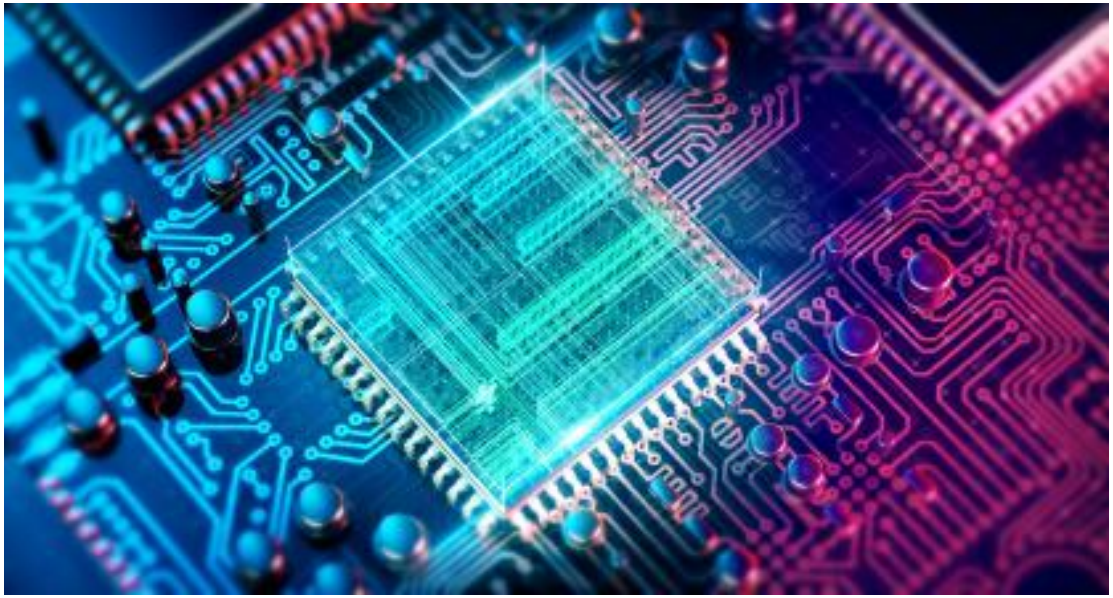

Image credits: Getty Images

Quantum and classical computational complexity

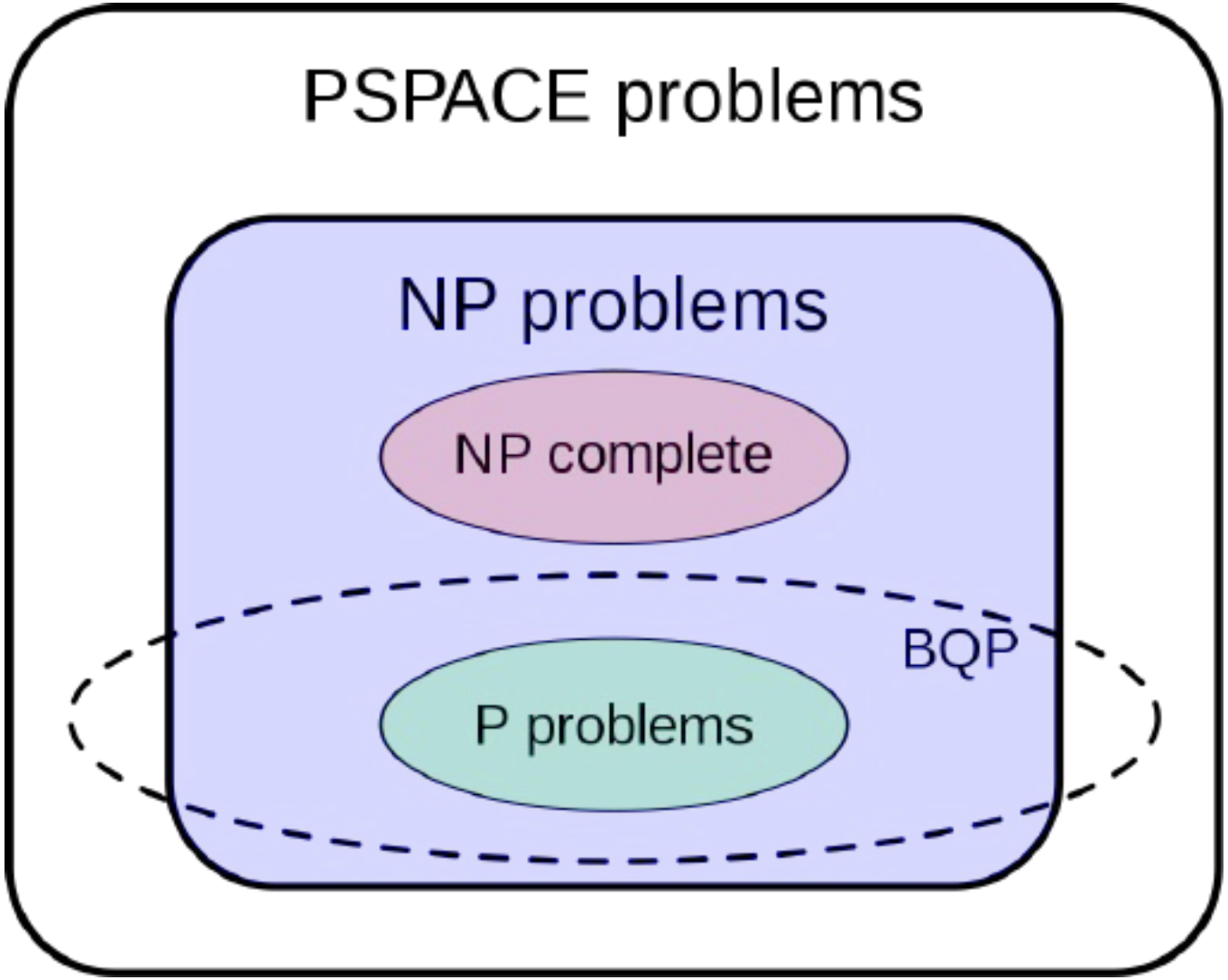

Image credits: wikipedia.org

What technologies are used to build quantum computers?

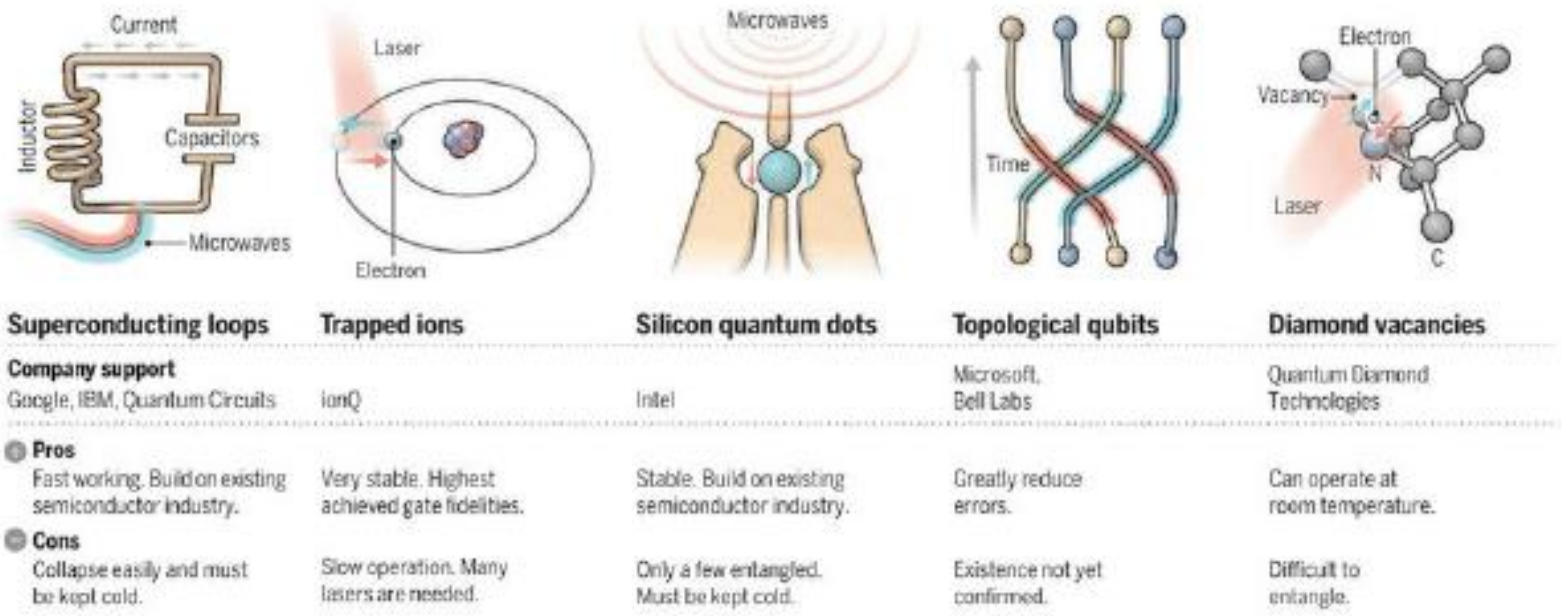

Image credits: Graphic by C. Bickle/Science data by Gabriel Popkin

What is a quantum computer like?

Image credits: IBM

The Sounds of IBM: IBM Q

Programming a quantum computer

- Different frameworks and programming languages:
  - qasm
  - Qiskit (IBM)
  - Cirq (Google)
  - Forest/pyqil (Rigetti)
  - Q# (Microsoft)
  - Ocean (D-Wave)
  - ...
- Most of them for quantum circuit specification

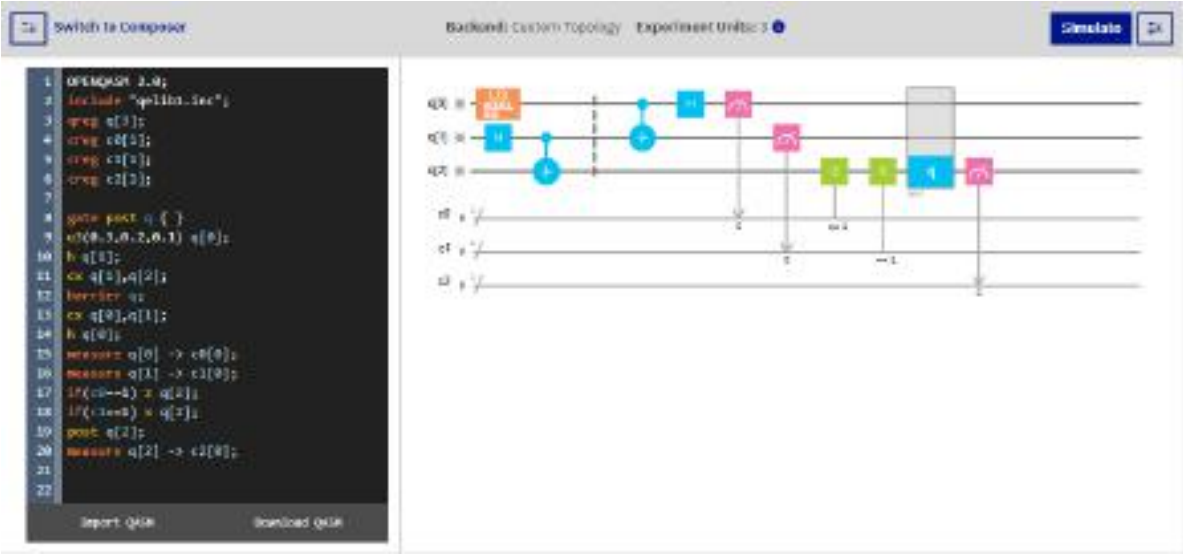

Image credits: IBM

What are the elements of a quantum circuit?

- Every computation has three elements: data, operations and results
- In quantum circuits:
  - Data = **qubits**
  - Operations = **quantum gates** (unitary transformations)
  - Results = **measurements**

Image credits: Adobe Stock

Part II

One-qubit systems: one qubit to rule them all

What is a qubit?

- A classical bit can take two different values (0 or 1). It is discrete.
- A qubit can "take" **infinitely** many different values. It is continuous.
- Qubits live in a **Hilbert vector space** with a basis of two elements that we denote $|0\rangle$ y $|1\rangle$.
- A generic qubit is in a **superposition**

$$|\psi\rangle = \alpha\,|0\rangle + \beta\,|1\rangle$$

where α and β are **complex numbers** such that

$$|\alpha|^2 + |\beta|^2 = 1$$

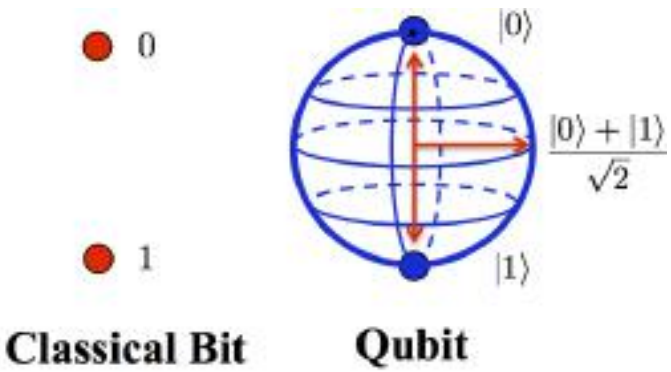

Image credits: https://prateekvjoshi.com/

Measuring a qubit

- The way to know the value of a qubit is to perform a measurement. However
  - The result of the measurement is random
  - When we measure, we only obtain one (classical) bit of information
- If we measure the state $|\psi\rangle = \alpha\,|0\rangle + \beta\,|1\rangle$ we get 0 with probability $|\alpha|^2$ and 1 with probability $|\beta|^2$.
- Moreover, the new state after the measurement will be $|0\rangle$ or $|1\rangle$ depending of the result we have obtained (wavefunction colapse)
- We cannot perform several independent measurements of $|\psi\rangle$ because we cannot copy the state (**no-cloning theorem**)

What are quantum gates?

- Quantum mechanics tells us that the evolution of an isolated state is given by the Schrödinger equation

$$H(t)|\psi(t)\rangle = i\hbar\frac{\partial}{\partial t}|\psi(t)\rangle$$

- In the case of quantum circuits, this implies that the operations that can be carried out are given by unitary matrices. That is, matrices U of complex numbers verifying

$$UU^\dagger = U^\dagger U = I$$

  where $U^\dagger$ is the conjugate transpose of U.
- Each such matrix is a possible quantum gate in a quantum circuit

Reversible computation

- As a consequence, all the operations have an inverse: **reversible computing**
- Every gate has the same number of inputs and outputs
- We cannot directly implement some classical gates such as *or*, *and*, *nand*, *xor*...
- But we can simulate any classical computation with small overhead
- Theoretically, we could compute without wasting energy (Landauer's principle, 1961)

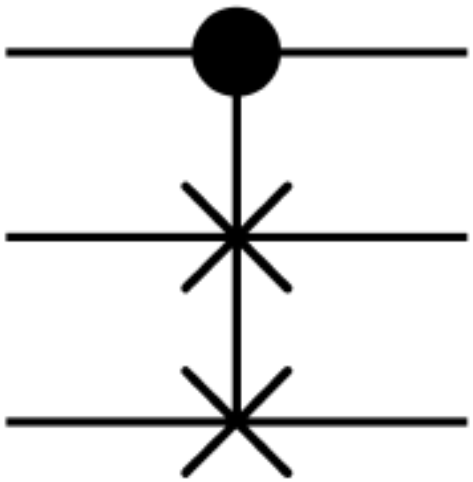

Image credits: wikipedia.org

One-qubit gates

- When we have just one qubit $|\psi\rangle = \alpha\,|0\rangle + \beta\,|1\rangle$, we usually represent it as a column vector $\begin{pmatrix} \alpha \\ \beta \end{pmatrix}$
- Then, a one-qubit gate can be identified with a matrix $U = \begin{pmatrix} a & b \\ c & d \end{pmatrix}$ that satisfies

$$\begin{pmatrix} a & b \\ c & d \end{pmatrix} \begin{pmatrix} \overline{a} & \overline{c} \\ \overline{b} & \overline{d} \end{pmatrix} = \begin{pmatrix} 1 & 0 \\ 0 & 1 \end{pmatrix}$$

  where $\overline{a}, \overline{b}, \overline{c}, \overline{d}$ are the conjugates of complex numbers a, b, c, d.

Action of a one-qubit gate

- A state $|\psi\rangle = \alpha\,|0\rangle + \beta\,|1\rangle$ is transformed into

$$\begin{pmatrix} a & b \\ c & d \end{pmatrix} \begin{pmatrix} \alpha \\ \beta \end{pmatrix} = \begin{pmatrix} a\alpha + b\beta \\ c\alpha + d\beta \end{pmatrix}$$

  that is, into the state $|\psi\rangle = (a\alpha + b\beta)\,|0\rangle + (c\alpha + d\beta)\,|1\rangle$
- Since U is unitary, it holds that

$$|(a\alpha + b\beta)|^2 + |(c\alpha + d\beta)|^2 = 1$$

The X or *NOT* gate

- The X gate is defined by the (unitary) matrix

$$\begin{pmatrix} 0 & 1 \\ 1 & 0 \end{pmatrix}$$

- Its action (in quantum circuit notation) is

$$|0\rangle \;-\boxed{X}-\; |1\rangle$$

$$|1\rangle \;-\boxed{X}-\; |0\rangle$$

  that is, it acts like the classical *NOT* gate
- On a general qubit its action is

$$\alpha\,|0\rangle + \beta\,|1\rangle \;-\boxed{X}-\; \beta\,|0\rangle + \alpha\,|1\rangle$$

The Z gate

- The Z gate is defined by the (unitary) matrix

$$\begin{pmatrix} 1 & 0 \\ 0 & -1 \end{pmatrix}$$

- Its action is

$$|0\rangle \;-\boxed{Z}-\; |0\rangle$$

$$|1\rangle \;-\boxed{Z}-\; -|1\rangle$$

The H or Hadamard gate

- The H or Hadamard gate is defined by the (unitary) matrix

$$\frac{1}{\sqrt{2}}\begin{pmatrix} 1 & 1 \\ 1 & -1 \end{pmatrix}$$

- Its action is

$$|0\rangle \;-\boxed{H}-\; \frac{|0\rangle+|1\rangle}{\sqrt{2}}$$

$$|1\rangle \;-\boxed{H}-\; \frac{|0\rangle-|1\rangle}{\sqrt{2}}$$

- We usually denote

$$|+\rangle := \frac{|0\rangle + |1\rangle}{\sqrt{2}}$$

and

$$|-\rangle := \frac{|0\rangle - |1\rangle}{\sqrt{2}}$$

Other important gates

- Y gate
$$\begin{pmatrix} 0 & -i \\ i & 0 \end{pmatrix}$$
- S gate
$$\begin{pmatrix} 1 & 0 \\ 0 & e^{i\frac{\pi}{2}} \end{pmatrix}$$
- T gate
$$\begin{pmatrix} 1 & 0 \\ 0 & e^{i\frac{\pi}{4}} \end{pmatrix}$$
- The gates X, Y and Z are also called, together with the identity, the Pauli gates. An alternative notation is σ_X, σ_Y, σ_Z.

The Bloch sphere

- A common way of representing the state of a qubit is by means of a point in the surface of the Bloch sphere
- If $|\psi\rangle = \alpha\,|0\rangle + \beta\,|1\rangle$ with $|\alpha|^2 + |\beta|^2 = 1$ we can find angles γ, δ, θ such that

$$\alpha = e^{i\gamma} \cos\frac{\theta}{2}$$

$$\beta = e^{i\delta} \sin\frac{\theta}{2}$$

- Since an overall phase is physically irrelevant, we can rewrite

$$|\psi\rangle = \cos\frac{\theta}{2}\,|0\rangle + e^{i\varphi} \sin\frac{\theta}{2}\,|1\rangle$$

with $0 \leq \theta \leq \pi$ and $0 \leq \varphi < 2\pi$.

The Bloch sphere (2)

- From $|\psi\rangle = \cos\frac{\theta}{2}|0\rangle + e^{i\varphi}\sin\frac{\theta}{2}|1\rangle$ we can obtain spherical coordinates for a point in $\mathbb{R}^3$

$$(\sin\theta\cos\varphi, \sin\theta\sin\varphi, \cos\theta)$$

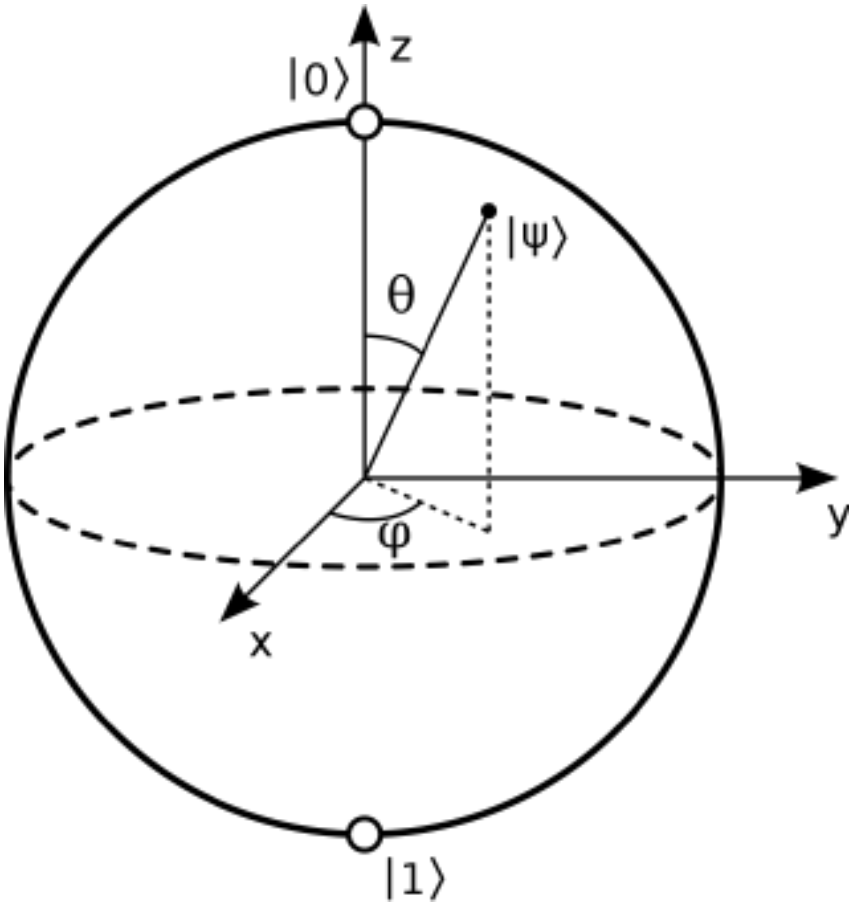

Image credits: wikipedia.org

Rotation gates

- We can define the following rotation gates

$$R_X(\theta) = e^{-i\frac{\theta}{2}X} = \cos\frac{\theta}{2}I - i\sin\frac{\theta}{2}X = \begin{pmatrix} \cos\frac{\theta}{2} & -i\sin\frac{\theta}{2} \\ -i\sin\frac{\theta}{2} & \cos\frac{\theta}{2} \end{pmatrix}$$

$$R_Y(\theta) = e^{-i\frac{\theta}{2}Y} = \cos\frac{\theta}{2}I - i\sin\frac{\theta}{2}Y = \begin{pmatrix} \cos\frac{\theta}{2} & -\sin\frac{\theta}{2} \\ \sin\frac{\theta}{2} & \cos\frac{\theta}{2} \end{pmatrix}$$

$$R_Z(\theta) = e^{-i\frac{\theta}{2}Z} = \cos\frac{\theta}{2}I - i\sin\frac{\theta}{2}Z = \begin{pmatrix} e^{-i\frac{\theta}{2}} & 0 \\ 0 & e^{i\frac{\theta}{2}} \end{pmatrix} \equiv \begin{pmatrix} 1 & 0 \\ 0 & e^{i\theta} \end{pmatrix}$$

- Notice that $R_X(\pi) \equiv X$, $R_Y(\pi) \equiv Y$, $R_Z(\pi) \equiv Z$, $R_Z(\frac{\pi}{2}) \equiv S$, $R_Z(\frac{\pi}{4}) \equiv T$

Using rotation gates to generate one-qubit gates

- For any one-qubit gate U there exist a unit vector $r = (r_x, r_y, r_z)$ and an angle θ such that

$$U \equiv e^{-i\frac{\theta}{2}r\cdot\sigma} = \cos\frac{\theta}{2}I - i\sin\frac{\theta}{2}(r_x X + r_y Y + r_z Z)$$

- For instance, choosing $\theta = \pi$ and $r = (\frac{1}{\sqrt{2}}, 0, \frac{1}{\sqrt{2}})$ we can see that

$$H \equiv e^{-i\frac{\theta}{2}r\cdot\sigma} = -i\frac{1}{\sqrt{2}}(X + Z)$$

- Additionally, it can also be proved that there exist angles α, β and γ such that

$$U \equiv R_Z(\alpha)R_Y(\beta)R_Z(\gamma)$$

Inner product, Dirac's notation and Bloch sphere

- The inner product of two states $|\psi_1\rangle = \alpha_1 |0\rangle + \beta_1 |1\rangle$ and $|\psi_2\rangle = \alpha_2 |0\rangle + \beta_2 |1\rangle$ is given by

$$\langle\psi_1|\psi_2\rangle = \begin{pmatrix}\overline{\alpha_1} & \overline{\beta_1}\end{pmatrix} \begin{pmatrix}\alpha_2 \\ \beta_2\end{pmatrix} = \overline{\alpha_1}\alpha_2 + \overline{\beta_1}\beta_2$$

- Notice that $\langle 0|0\rangle = \langle 1|1\rangle = 1$ and $\langle 0|1\rangle = \langle 1|0\rangle = 0$
- This allows us to compute

$$\begin{aligned}\langle\psi_1|\psi_2\rangle &= \left(\overline{\alpha_1}\langle 0| + \overline{\beta_1}\langle 1|\right)\left(\alpha_2 |0\rangle + \beta_2 |1\rangle\right) \\ &= \overline{\alpha_1}\alpha_2 \langle 0|0\rangle + \overline{\alpha_1}\beta_2 \langle 0|1\rangle + \overline{\beta_1}\alpha_2 \langle 1|0\rangle + \overline{\beta_1}\beta_2 \langle 1|1\rangle \\ &= \overline{\alpha_1}\alpha_2 + \overline{\beta_1}\beta_2\end{aligned}$$

- Orthogonal states are antipodal on the Bloch sphere

Hello, quantum world!

- Our very first quantum circuit!

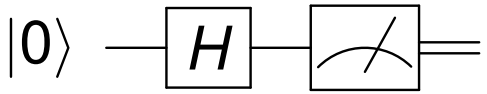

- After applying the H gate the qubit state is

$$\frac{|0\rangle + |1\rangle}{\sqrt{2}}$$

- When we measure, we obtain 0 or 1, each with 50% probability: we have a circuit that generates perfectly uniform random bits!

Part III

The BB84 protocol: Alice and Bob's hotline

One-time pad: a Catch-22 situation

- Alice wants to send Bob a message m without Eve being able to learn anything about its content
- This can be achieved if Alice and Bob share in advance a string k of random bits:
  - Alice computes $x = m \oplus k$ and sends x to Bob
  - Eve cannot learn anything from x $(Pr(M = m|X = x) = Pr(M = m))$
  - But Bob can recover m by computing $x \oplus k$
- The main problem is that k has to be as long as m and cannot be reused so... how to agree on k?

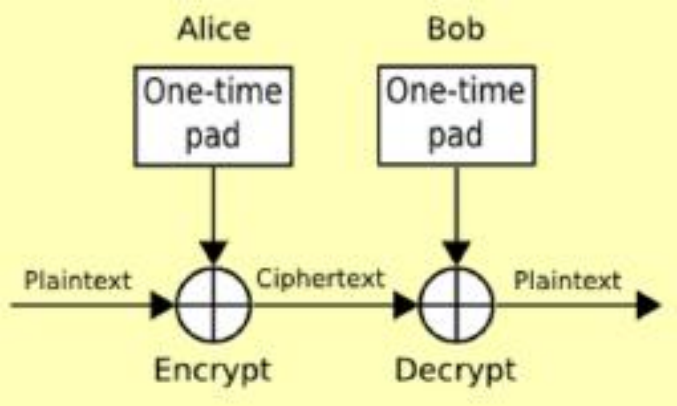

Image credits: nullprogram.com

The problem of key distribution

- Alice and Bob may share several keys for later use when they are together
- But... what if they cannot meet each other?
- There exist key distribution methods like the Diffie-Hellman protocol but...
  - They are not unconditionally secure (they usually rely on hardness assumptions)
  - In fact, DH can be broken with quantum computers!

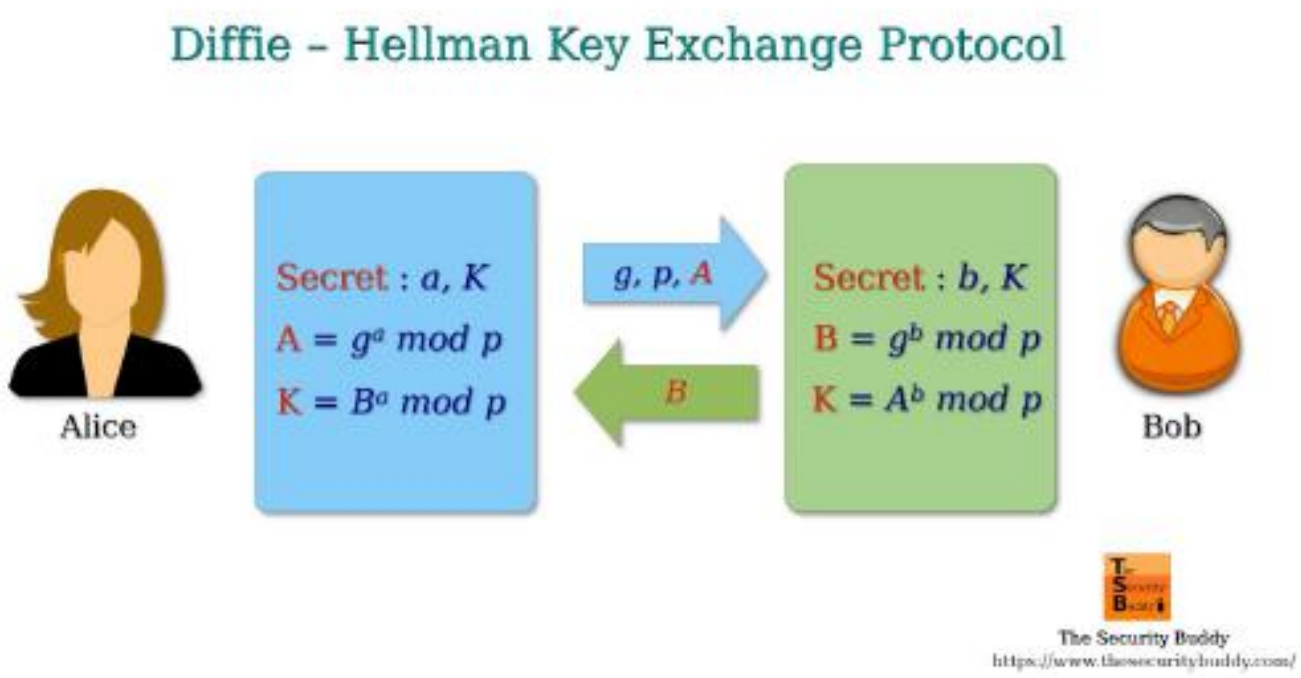

BB84: Alice's part

- In 1984, Charles Bennett and Gilles Brassard proposed the first protocol for quantum key distribution (QKD)
- Alice generates a (private) string of random bits
- She could even do this with a quantum computer (H gate + measure)
- Then, for each bit she randomly chooses if she encodes it in the $\{|0\rangle, |1\rangle\}$ basis or in the $\{|+\rangle, |-\rangle\}$ basis (remember that $|+\rangle = \frac{1}{\sqrt{2}}(|0\rangle + |1\rangle)$ and $|-\rangle = \frac{1}{\sqrt{2}}(|0\rangle - |1\rangle)$)
- She can easily do this by using H and X gates (recall that $H|0\rangle = |+\rangle, H|1\rangle = |-\rangle, X|0\rangle = |1\rangle, X|1\rangle = |0\rangle$)
- Alice sends the resulting qubits to Bob (through a quantum but not necessarily secure channel)

BB84: Bob's part

- Each time Bob receives a qubit, he randomly decides whether he will measure it in the $\{|0\rangle, |1\rangle\}$ basis or in the $\{|+\rangle, |-\rangle\}$ basis
- He does this by applying (or not) the H gate before measuring
- He writes down the results and the basis he used:
  - If he used $\{|0\rangle, |1\rangle\}$ he writes down 0 if he gets $|0\rangle$ and 1 if he gets $|1\rangle$
  - If he used $\{|+\rangle, |-\rangle\}$ he writes down 0 if he gets $|+\rangle$ and 1 if he gets $|-\rangle$

BB84: Alice and Bob on the phone

- After this process, Alice and Bob talk on a classical channel (authenticated but not necessarily secure)
- Bob announces the bases he has used for the measurements and Alice announces the bases she used to code the bits
- Bob does NOT announce the results of his measurements
- For those bits in which Bob measured with the same basis that Alice used for coding, he has got the bit that Alice intended to send
- The rest are discarded (they will keep about half of the bits)

BB84: The protocol in an image

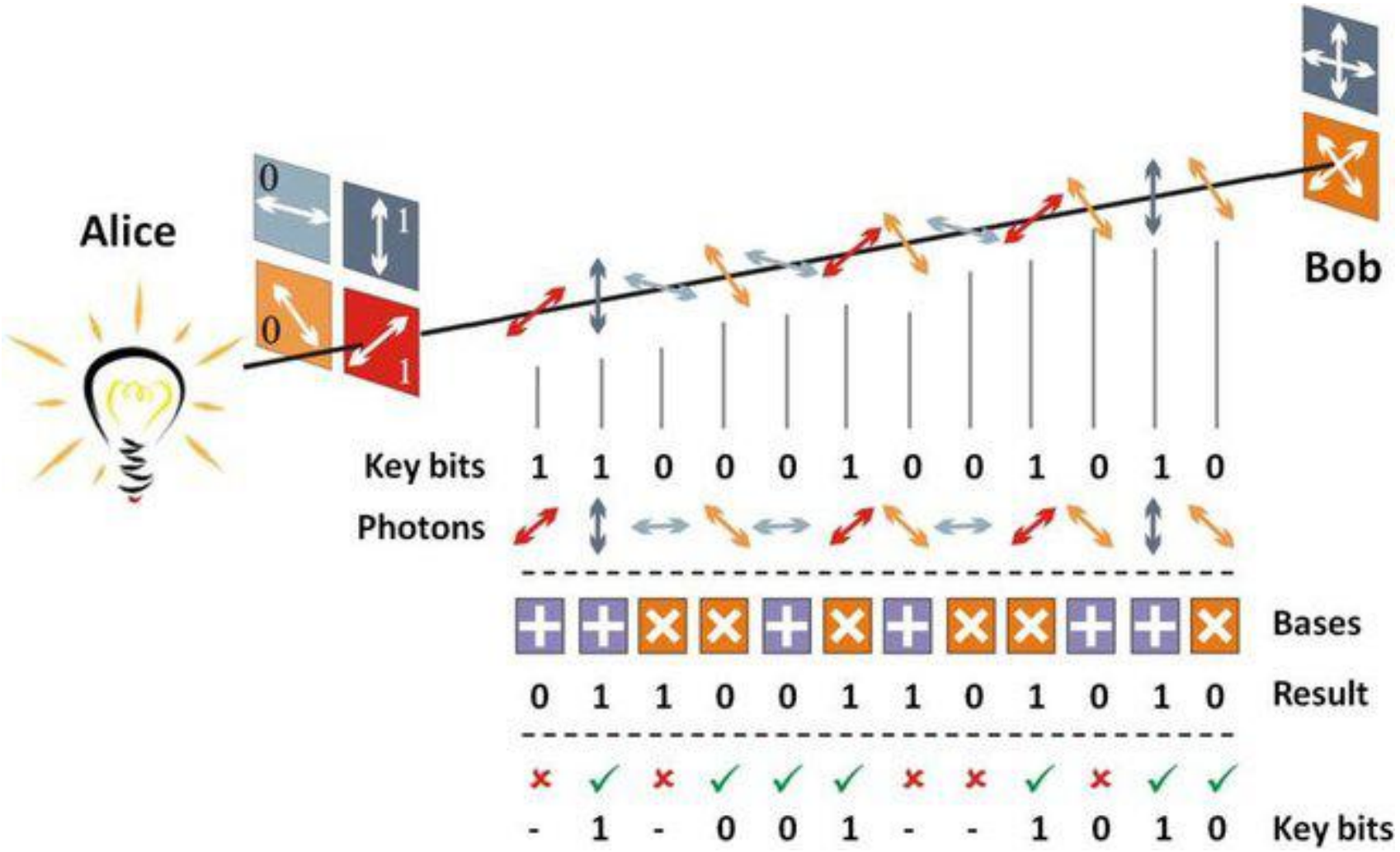

Image credits: A. Carrasco-Casado, V. Fernández, N. Denisenko

Eve tries to intercept and resend...

- Imagine Eve has access to the qubits that Alice sends to Bob
- Eve could try to measure and resend the qubit to Bob
- It is imposible for Eve to distinguish the four possibilities $\{|0\rangle, |1\rangle, |+\rangle, |-\rangle\}$ because she does not know the basis that Alice has chosen
- If Eve chooses a basis at random, she will make an error half of the time and Alice and Bob may detect it (by sharing some of the bits of the key to check that they are equal)
- Eve cannot copy the qubits and wait to check the basis that Alice and Bob have used (no cloning theorem)
- Other more complex attacks are possible, but can be shown to fail

Information reconciliation and privacy amplification

- Because of imperfections in the channel and devices or because of eavesdropping, some of the bits that Alice and Bob have may be different
- They can conduct a process of information reconciliation (for instance, with the cascade protocol)
- After this phase (or even before), some information may have leaked to Eve
- Alice and Bob can perform privacy amplification (for instance, with randomness extractors)

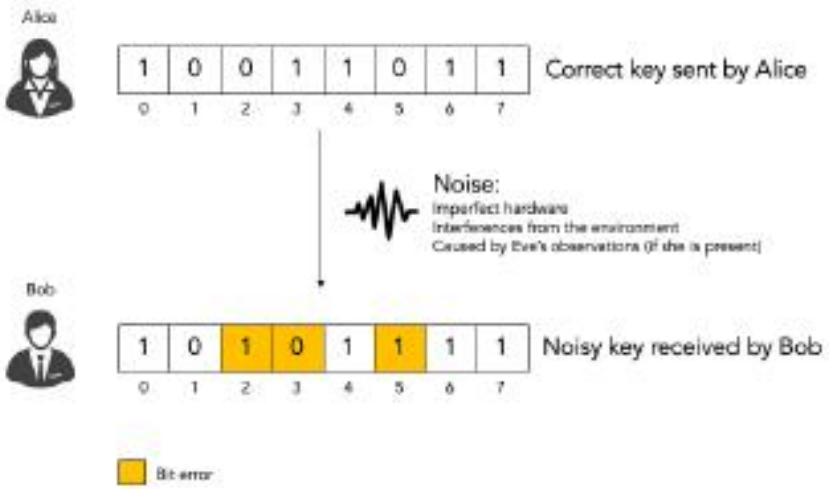

Image credits: hikingandcoding.wordpress.com

QKD at CERN

Image credits: https://arxiv.org/pdf/1203.4940.pdf

Kak's three-stage protocol

- Proposed by Kak in 2006
- It needs an authenticated quantum channel
- Suppose Alice wants to send $|x\rangle \in \{|0\rangle, |1\rangle\}$ to Bob:
  - Alice chooses θ_A at random and sends $R_Y(\theta_A)|x\rangle$ to Bob
  - Bob choose θ_B at random and sends $R_Y(\theta_B)R_Y(\theta_A)|x\rangle$ back to Alice
  - Alice applies $R_Y(-\theta_A)$ and sends

$$R_Y(-\theta_A)R_Y(\theta_B)R_Y(\theta_A)|x\rangle = R_Y(\theta_B)|x\rangle$$

    to Bob
- Bob can now recover $|x\rangle$ by applying $R_Y(-\theta_B)$

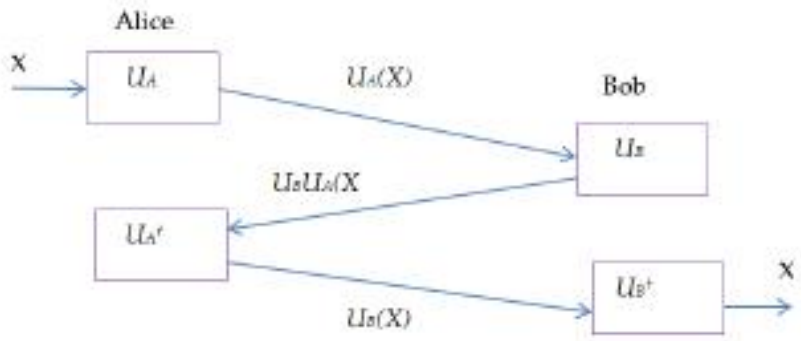

Image credits: wikipedia.org

The quantum one-time pad

- The analagous of the one-time pad with quantum operations would be to choose $a \in \{0, 1\}$ at random and encode $|x\rangle \in \{|0\rangle, |1\rangle\}$ as

$$X^a |x\rangle = |x \oplus a\rangle$$

- This cannot be extended to general qubits $|\psi\rangle$ because $X|+\rangle = |+\rangle$ and $X|-\rangle \equiv |-\rangle$
- We need to choose two bits a and b at random and encode $|\psi\rangle$ as

$$Z^b X^a |\psi\rangle$$

- Bob can now recover $|\psi\rangle$ by applying $X^a Z^b$
- It can be proved that this is unconditionally secure
- The QOTP is the basis of some blind quantum computing protocols

Other protocols that use independent qubits

- The use of independent qubits does not fully exploit the possibilities of quantum information, but there are some additional interesting applications
- For instance:
  - Other QKD protocols: B92, SARG04, Six-state protocol...
  - The concept of quantum money (Wiesner)
  - The Elitzur-Vaidman bomb tester
  - Quantum position verification
  - One-qubit classifier

Image credits: The American Association for the Advancement of Science

Part IV

Two-qubit systems: more than the sum of their parts

Working with two qubits

- Each of the qubits can be in state $|0\rangle$ or in state $|1\rangle$
- So for two qubits we have four possibilities:

$$|0\rangle \otimes |0\rangle, |0\rangle \otimes |1\rangle, |1\rangle \otimes |0\rangle, |1\rangle \otimes |1\rangle$$

that we also denote

$$|0\rangle |0\rangle, |0\rangle |1\rangle, |1\rangle |0\rangle, |1\rangle |1\rangle$$

or

$$|00\rangle, |01\rangle, |10\rangle, |11\rangle$$

- Of course, we can have superpositions so a generic state is

$$|\psi\rangle = \alpha_{00} |00\rangle + \alpha_{01} |01\rangle + \alpha_{10} |10\rangle + \alpha_{11} |11\rangle$$

where α_{xy} are complex numbers such that

$$\sum_{x,y=0}^{1} |\alpha_{xy}|^2 = 1$$

Measuring a two-qubit system

- Suppose we have a state

$$|\psi\rangle = \alpha_{00}\,|00\rangle + \alpha_{01}\,|01\rangle + \alpha_{10}\,|10\rangle + \alpha_{11}\,|11\rangle$$

- If we measure both qubits, we will obtain:
  - 00 with probability $|\alpha_{00}|^2$ and the new state will be $|00\rangle$
  - 01 with probability $|\alpha_{01}|^2$ and the new state will be $|01\rangle$
  - 10 with probability $|\alpha_{10}|^2$ and the new state will be $|10\rangle$
  - 11 with probability $|\alpha_{11}|^2$ and the new state will be $|11\rangle$
- It is an analogous situation to what we had with one qubit, but now with four possibilities

Measuring just one qubit in a two-qubit system

- If we have a state

$$|\psi\rangle = \alpha_{00}|00\rangle + \alpha_{01}|01\rangle + \alpha_{10}|10\rangle + \alpha_{11}|11\rangle$$

  we can also measure just one qubit
- If we measure the first qubit (for the second one is analogous):
  - We will get 0 with probability $|\alpha_{00}|^2 + |\alpha_{01}|^2$
  - In that case, the new state of $|\psi\rangle$ will be

$$\frac{\alpha_{00}|00\rangle + \alpha_{01}|01\rangle}{\sqrt{|\alpha_{00}|^2 + |\alpha_{01}|^2}}$$

  - We will get 1 with probability $|\alpha_{10}|^2 + |\alpha_{11}|^2$
  - In that case, the new state of $|\psi\rangle$ will be

$$\frac{\alpha_{10}|10\rangle + \alpha_{11}|11\rangle}{\sqrt{|\alpha_{10}|^2 + |\alpha_{11}|^2}}$$

Two-qubit states and vector representation

- A general two-qubit quantum state is

$$|\psi\rangle = \alpha_{00}\,|00\rangle + \alpha_{01}\,|01\rangle + \alpha_{10}\,|10\rangle + \alpha_{11}\,|11\rangle$$

- We can represent with the column vector

$$\begin{pmatrix} \alpha_{00} \\ \alpha_{01} \\ \alpha_{10} \\ \alpha_{11} \end{pmatrix}$$

- We can compute inner products by noticing that

$$\langle 00|00\rangle = \langle 01|01\rangle = \langle 10|10\rangle = \langle 11|11\rangle = 1$$

$$\langle 00|01\rangle = \langle 00|10\rangle = \langle 00|11\rangle = \cdots = \langle 11|00\rangle = 0$$

- A two-qubit quantum gate is a unitary matrix U of size 4×4

Tensor product of one-qubit gates

- The simplest way of obtaining a two-qubit gate is by having a pair of one-qubit gates A and B acting on each of the qubits
- In this case, the matrix for the two-qubit gate is the tensor product $A \otimes B$
- It holds that

$$(A \otimes B)(|\psi_1\rangle \otimes |\psi_2\rangle) = (A\,|\psi_1\rangle) \otimes (B\,|\psi_2\rangle)$$

- Of course, either A or B may be the identity
- This does NOT exhaust all posible two-qubit gates

$$\begin{bmatrix} a_{1,1} & a_{1,2} \\ a_{2,1} & a_{2,2} \end{bmatrix} \otimes \begin{bmatrix} b_{1,1} & b_{1,2} \\ b_{2,1} & b_{2,2} \end{bmatrix} = \begin{bmatrix} a_{1,1}\begin{bmatrix} b_{1,1} & b_{1,2} \\ b_{2,1} & b_{2,2} \end{bmatrix} & a_{1,2}\begin{bmatrix} b_{1,1} & b_{1,2} \\ b_{2,1} & b_{2,2} \end{bmatrix} \\ a_{2,1}\begin{bmatrix} b_{1,1} & b_{1,2} \\ b_{2,1} & b_{2,2} \end{bmatrix} & a_{2,2}\begin{bmatrix} b_{1,1} & b_{1,2} \\ b_{2,1} & b_{2,2} \end{bmatrix} \end{bmatrix} = \begin{bmatrix} a_{1,1}b_{1,1} & a_{1,1}b_{1,2} & a_{1,2}b_{1,1} & a_{1,2}b_{1,2} \\ a_{1,1}b_{2,1} & a_{1,1}b_{2,2} & a_{1,2}b_{2,1} & a_{1,2}b_{2,2} \\ a_{2,1}b_{1,1} & a_{2,1}b_{1,2} & a_{2,2}b_{1,1} & a_{2,2}b_{1,2} \\ a_{2,1}b_{2,1} & a_{2,1}b_{2,2} & a_{2,2}b_{2,1} & a_{2,2}b_{2,2} \end{bmatrix}$$

Image credits: wikipedia.org

The *CNOT* gate

- The *CNOT* (or controlled-*NOT* or *cX*) gate is given by the (unitary) matrix

$$\begin{pmatrix} 1 & 0 & 0 & 0 \\ 0 & 1 & 0 & 0 \\ 0 & 0 & 0 & 1 \\ 0 & 0 & 1 & 0 \end{pmatrix}$$

- If the first qubit is $|0\rangle$, nothing changes. If it is $|1\rangle$, we flip the second bit (and the first stays the same)
- That is:

$$|00\rangle \to |00\rangle \qquad |01\rangle \to |01\rangle$$

$$|10\rangle \to |11\rangle \qquad |11\rangle \to |10\rangle$$

Action of the *CNOT* gate

- Its action on $x, y \in \{0, 1\}$ is, then:

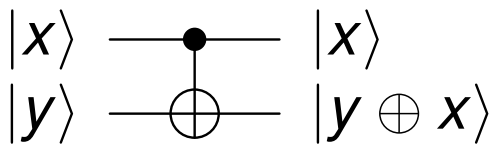

- This is an extremely important gate for it allows to:
  - Create entanglement (more on this soon)
  - Copy *classical* information, because:

$$|00\rangle \to |00\rangle$$

$$|10\rangle \to |11\rangle$$

  - Construct other controlled gates

Equivalences with CNOT gates

- Sometimes, CNOT gates are not implemented between all pairs of qubits in a quantum computer
- We can use H gates to change the control and target of a CNOT gate

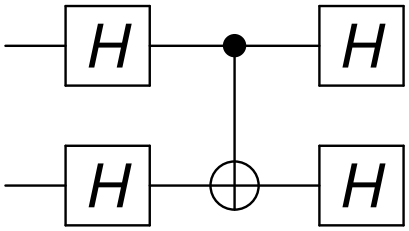

- We can swap states using three CNOT gates

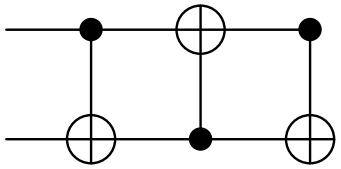

Constructing controlled gates by using the *CNOT* gate

- Any one-qubit gate U can be decomposed in the form

$$e^{i\theta} AXBXC$$

with $ABC = I$

- Then, the circuit

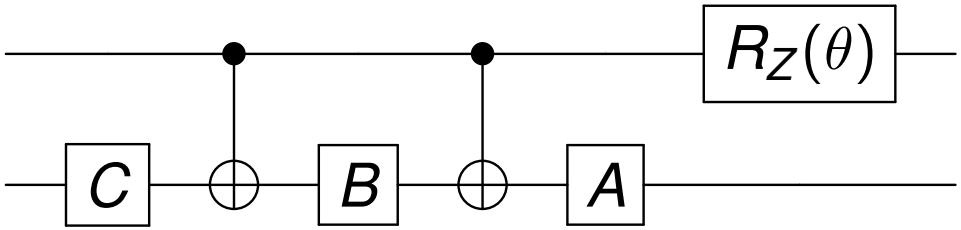

implements a U gate on the lower qubit controlled by the upper qubit

The no-cloning theorem

- There is **no** quantum gate that makes copies of an arbitrary (unknown) qubit
- The proof is easy: suppose we have a gate U such that $U|\psi\rangle|0\rangle = |\psi\rangle|\psi\rangle$
- Then $U|00\rangle = |00\rangle$ and $U|10\rangle = |11\rangle$ and by linearity

$$U\left(\frac{1}{\sqrt{2}}(|00\rangle+|10\rangle)\right) = \frac{1}{\sqrt{2}}(U|00\rangle+U|10\rangle) = \frac{1}{\sqrt{2}}(|00\rangle+|11\rangle)$$

- But

$$\frac{|00\rangle + |10\rangle}{\sqrt{2}} = \left(\frac{|0\rangle + |1\rangle}{\sqrt{2}}\right)|0\rangle$$

so we should have

$$U\left(\frac{|00\rangle + |10\rangle}{\sqrt{2}}\right) = \frac{(|0\rangle + |1\rangle)}{\sqrt{2}}\frac{(|0\rangle + |1\rangle)}{\sqrt{2}} \neq \frac{1}{\sqrt{2}}(|00\rangle + |11\rangle)$$

Quantum entanglement: the spooky action at a distance

- We say that a state $|\psi\rangle$ is a product state if it can be written in the form
$$|\psi\rangle = |\psi_1\rangle\,|\psi_2\rangle$$
where $|\psi_1\rangle$ and $|\psi_2\rangle$ are two states (of at least one qubit)
- An **entangled** state is a state that is not a product state
- Example of entangled states (Bell states):

$$\frac{|00\rangle + |11\rangle}{\sqrt{2}} \qquad \frac{|00\rangle - |11\rangle}{\sqrt{2}}$$

$$\frac{|01\rangle + |10\rangle}{\sqrt{2}} \qquad \frac{|01\rangle - |10\rangle}{\sqrt{2}}$$

Hello, entangled world!

- We can construct (and measure) Bell states with simple circuits

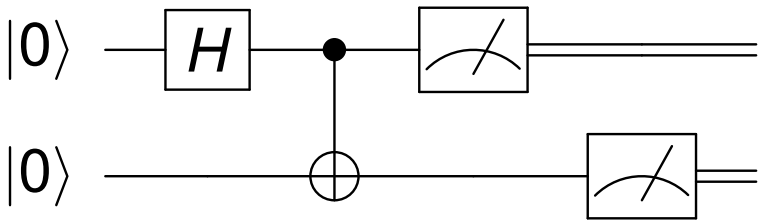

- Initially, the state of the system is $|00\rangle$
- After we apply the H gate, the state is

$$\frac{|00\rangle + |10\rangle}{\sqrt{2}}$$

- When we apply the *CNOT* gate, the state changes to

$$\frac{|00\rangle + |11\rangle}{\sqrt{2}}$$

Hello, entangled world!

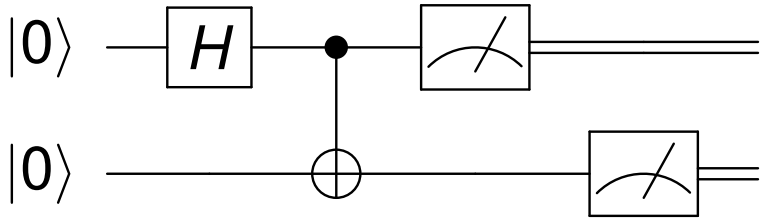

- Before we measure the first qubit, we have the state $\frac{|00\rangle+|11\rangle}{\sqrt{2}}$
- We will get 0 or 1, each with probability $\frac{1}{2}$
- Suppose we obtain 0. Then, the new state will be $|00\rangle$
- Then, when we measure the second qubit we will obtain 0 with probability 1!
- Also, if we obtain 1 in the first qubit, in the second we will also obtain 1!

Part V

The CHSH game: Nature isn't classical, dammit

The CHSH game

- Based in an inequality proposed in 1969 by Clauser, Horne, Shimony and Holt based on previous work by John Bell
- Alice and Bob receive bits x and y from a referee
- They have to respond with bits a and b
- They win if

$$a \oplus b = x \cdot y$$

- They can decide on a joint strategy beforehand, but they cannot communicate during the game

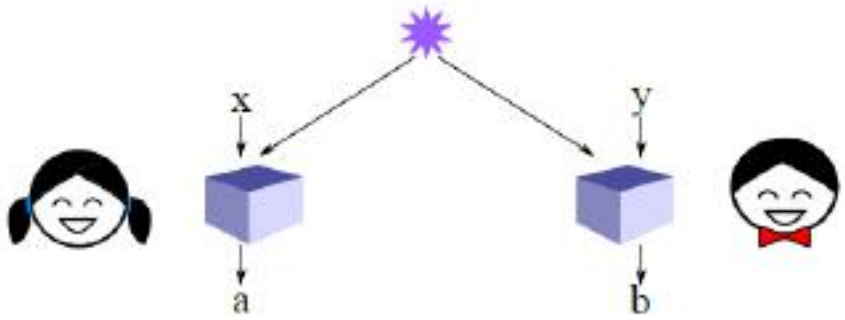

Image credits: quantumcomputing.stackexchange.com

Classical strategies for the CHSH game

- Alice and Bob can win 75% of the time if they always answer ‘0’
- No other deterministic strategy can do better
- And probabilistic strategies are convex combinations of classical strategies so they cannot improve the 75% success rate

	$a = 0$	$a = 1$	$a = x$	$a = \neg x$
$b = 0$	$3/4$	$1/4$	$3/4$	$1/4$
$b = 1$	$1/4$	$3/4$	$1/4$	$3/4$
$b = y$	$3/4$	$1/4$	$1/4$	$3/4$
$b = \neg y$	$1/4$	$3/4$	$3/4$	$1/4$

Image credits: Ryan O’Donnell

Quantum strategy for the CHSH game

- Alice and Bob share a Bell pair $\frac{|00\rangle+|11\rangle}{\sqrt{2}}$ before the start of the game
- If Alice receives 0, she measures her qubit and ouputs the result
- If she receives 1, she applies $R_Y(\frac{\pi}{2})$ to her qubit and then she measures it
- If Bob receives 0, he applies $R_Y(\frac{\pi}{4})$. Else, he applies $R_Y(-\frac{\pi}{4})$.
- Then, he measures his qubit
- The probability of winning is now $\cos^2(\frac{\pi}{8}) \approx 0.85 > 0.75$

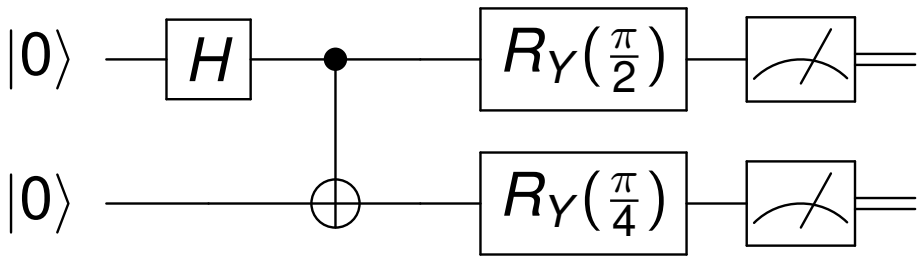

Some comments on the CHSH game

- It can be proved that $\cos^2(\frac{\pi}{8})$ is the highest possible success rate for a quantum strategy (Tsirelson's bound)
- The CHSH game can be used to rule out local realism
- Several experiments have been conducted, including:
  - Aspect et al. (1981-82)
  - Hensen et al. (2005) - Eliminate the locality and detection loopholes
- All of them agree with the predictions of quantum theory

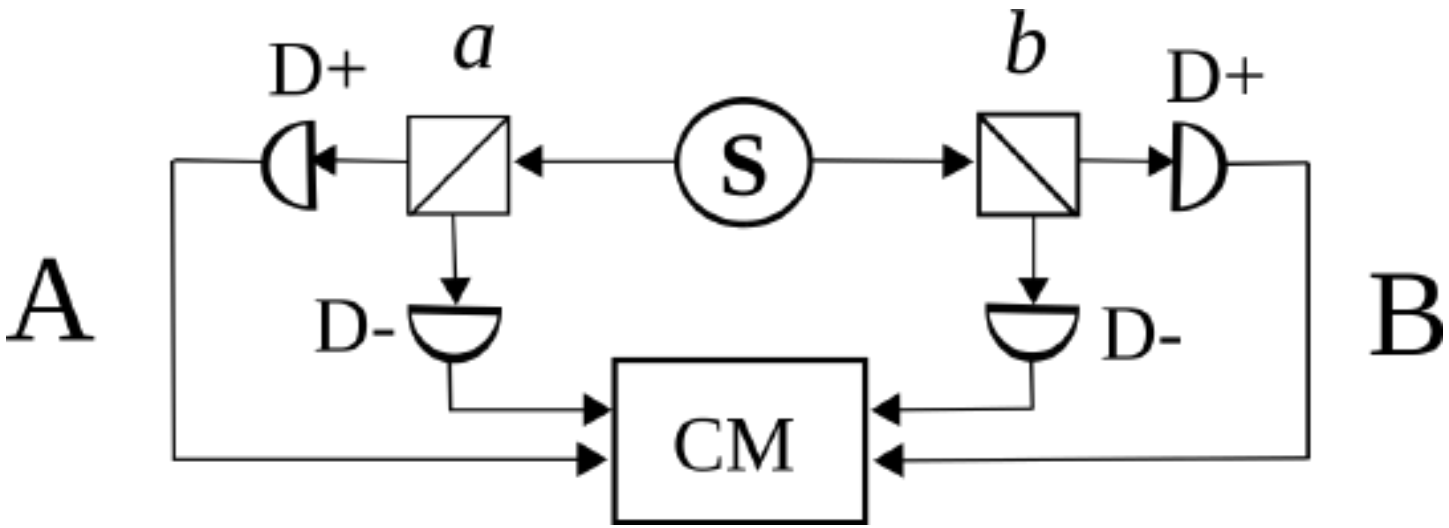

Image credits: George Stamatiou based on png file of C.Thompson

The GHZ game

- Introduced by Greenberger, Horne and Zeilinger
- A referee selects *rst* from $\{000, 011, 101, 110\}$ and sends *r* to Alice, *s* to Bob and *t* to *Charlie*
- They produce *a*, *b* and *c* and win if

$$a \oplus b \oplus c = r \vee s \vee t$$

- Classically, they can only win with 75% probability
- Quantumly, they can win every single time
  - They share the state

$$\frac{1}{2}(|000\rangle - |011\rangle - |101\rangle - |110\rangle$$

  - They apply *H* to their qubit if the receive 1
  - They measure and return the answer
- This is sometimes called "quantum pseudo-telepathy" (Brassard, Cleve, Tapp)
- Both the CHSH and the GHZ game can be used for randomness certification (and expansion)

Part VI

Quantum teleportation and superdense coding: entangled up in blue

Quantum teleportation: Quantum me up, Scotty!

- Can Alice sent a qubit $|\psi\rangle$ to Bob it there is no quantum channel available?
- We are interested in the most general case, even if Alice does not know which state she has
- The problem can be solved if Alice and Bob share an entangled state $\frac{1}{\sqrt{2}}(|00\rangle + |11\rangle)$

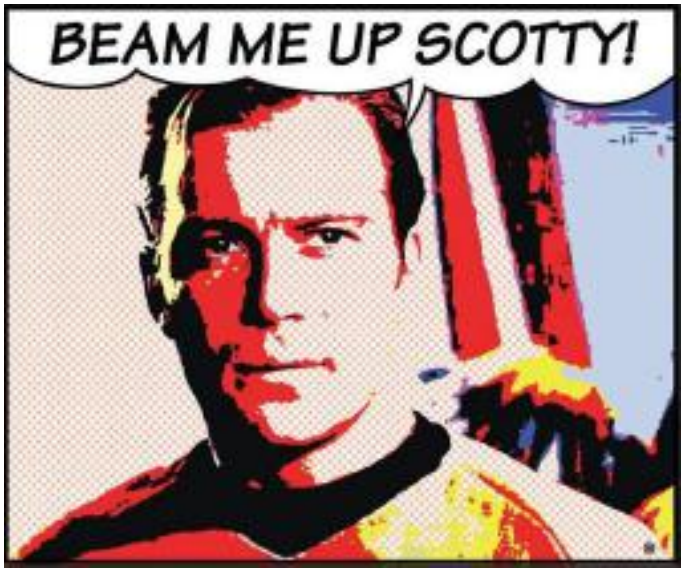

Image credits: www.geeksaresexy.net

Quantum teleportation: Alice's part

- Alice and Bob share an entangled state $\frac{1}{\sqrt{2}}(|00\rangle + |11\rangle)$
  - This can be done in advance
  - Or they can rely on a source that distributes entangled pairs
- Alice applies a CNOT gate to the qubit she wants to teleport $|\psi\rangle = a|0\rangle + b|1\rangle$ and to her part of the Bell pair. We will have

$$\frac{1}{\sqrt{2}}(a(|000\rangle + |011\rangle) + b(|110\rangle + |101\rangle))$$

- Alice further applies the H gate to the qubit she wants teleported. Then, we have

$$\frac{1}{2}\big(|00\rangle(a|0\rangle + b|1\rangle) + |01\rangle(b|0\rangle + a|1\rangle) + |10\rangle(a|0\rangle - b|1\rangle) + |11\rangle(-b|0\rangle + a|1\rangle)\big)$$

- Alice measures her two qubits and sends the result (two classical bits) to Bob (through a classical channel)

Quantum teleportation: Bob's part

- Bob uses the second bit received from Alice to decide if he applies X to his qubit
- And he uses the first bit to decide if he applies Z

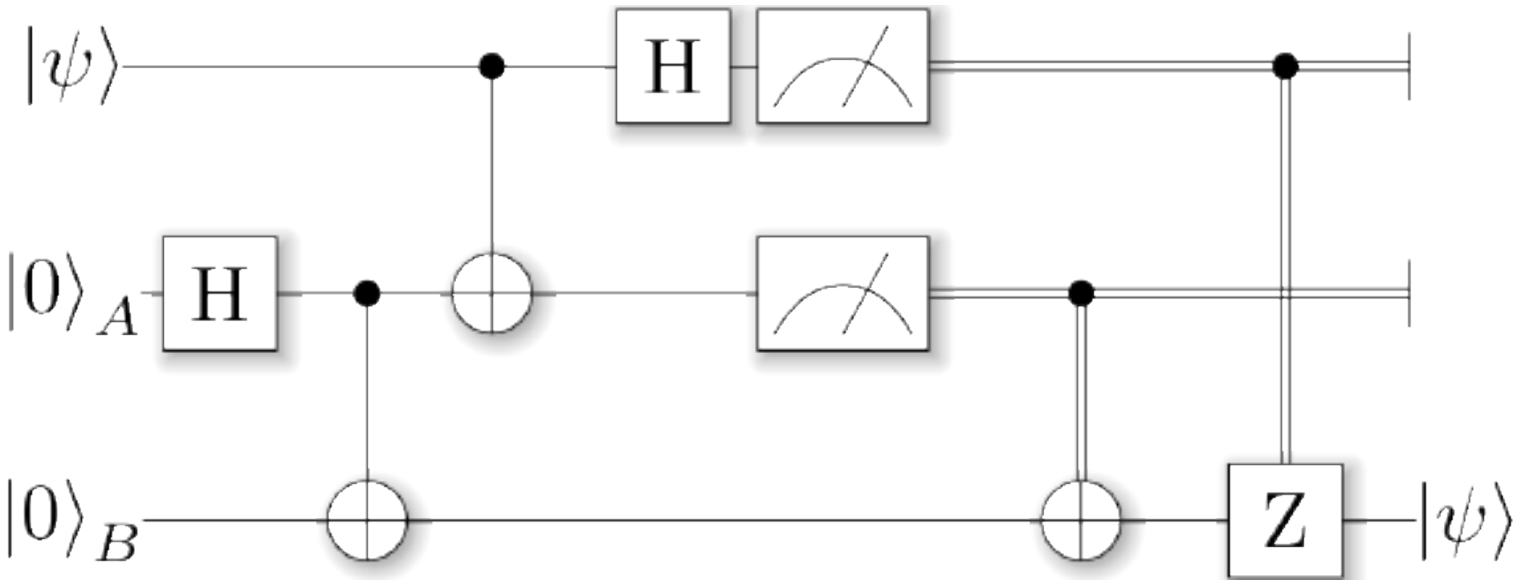

Image credits: ProjectQ

Quantum teleportation: some comments

- It is not matter that is teleported but information
- When Alice measure her qubit, she looses it (if not, we would be contradicting the no-cloning theorem)
- To teleport a qubit, we need two classical bits and one entangled pair:

$$2bits + 1ebit \geq 1qubit$$

- Teleportation is not instantaneous, we need classical communication (no-communication theorem)
- Quantum teleportation has been shown experimentally (current record is 1,400 km)
- Demonstration of quantum teleportation in Quirk

Entanglement swapping

- Quantum teleportation can also be used with entangled qubits
- Alice shares a Bell pair with Bob and another one with Charlie
- In the figure, the top and bottom qubits belong to Alice. The second from the top belongs to Bob and the other to Charlie
- Alice teleports her top qubit to Charlie
- Now Bob's and Charlie's qubits are entangled (although maybe they were never in direct contact)

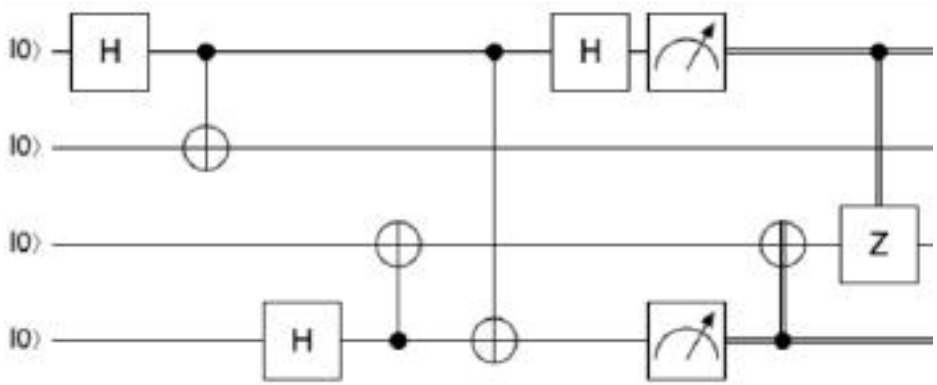

Image credits: Created with Quirk. Click here to access the circuit

Gate teleportation

- We can generalize the idea of quantum teleportation to teleport the action of gates
- With the circuit of the figure, we can apply gate U to an arbitrary state $|\psi\rangle$
- This is useful if preparing $\frac{1}{\sqrt{2}}(|0\rangle\, U\, |0\rangle + |1\rangle\, U\, |1\rangle)$ and applying $UXU^\dagger$, $UZU^\dagger$, $UZXU^\dagger$ are easy compared to applying U to a general qubit
- Such a situation can happen when $U = T$ in the context of fault-tolerant quantum computing

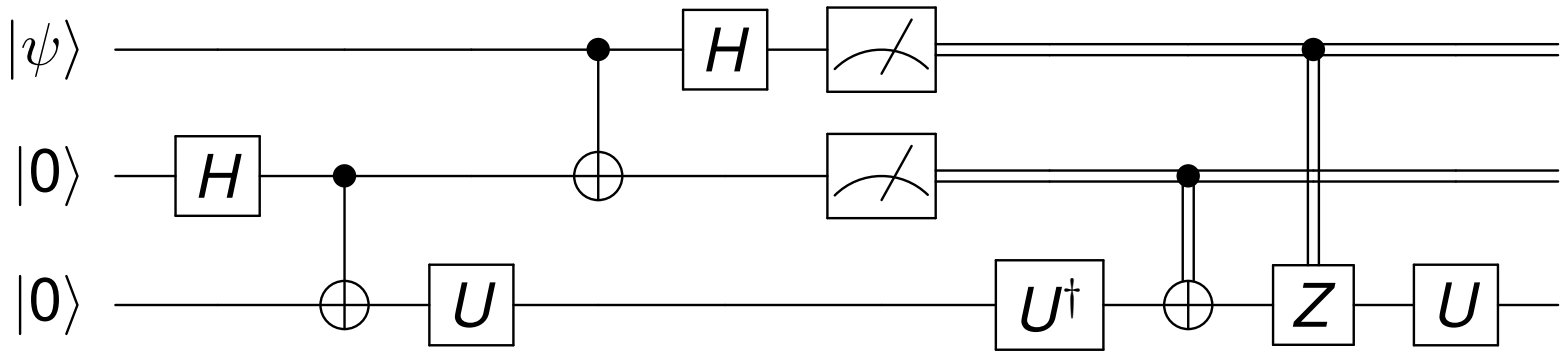

Superdense coding: two for the price of one (more or less)

- As we have seen, in the presence of a Bell pair, we can send a qubit with just two classical qubits
- But... how many classical qubits can we communicate with one qubit?
- Holevo's bound: the accesible information of one qubit is just one bit
- However, if Alice and Bob share in advance a Bell pair... we can send two bits of information with just one qubit!

$$1 qubit + 1 ebit \geq 2 bits$$

- This protocol is, in some sense, the inverse of quantum teleportation

Superdense coding: Alice's part

- Alice and Bob share a Bell pair in advance $\frac{1}{\sqrt{2}}(|00\rangle + |11\rangle)$
- Alice wants to send to Bob two classical bits b_1 and b_2
- If $b_2 = 1$, she applies X to her qubit
- If $b_1 = 1$, she applies Z to her qubit
- Then, she sends her qubit to Bob

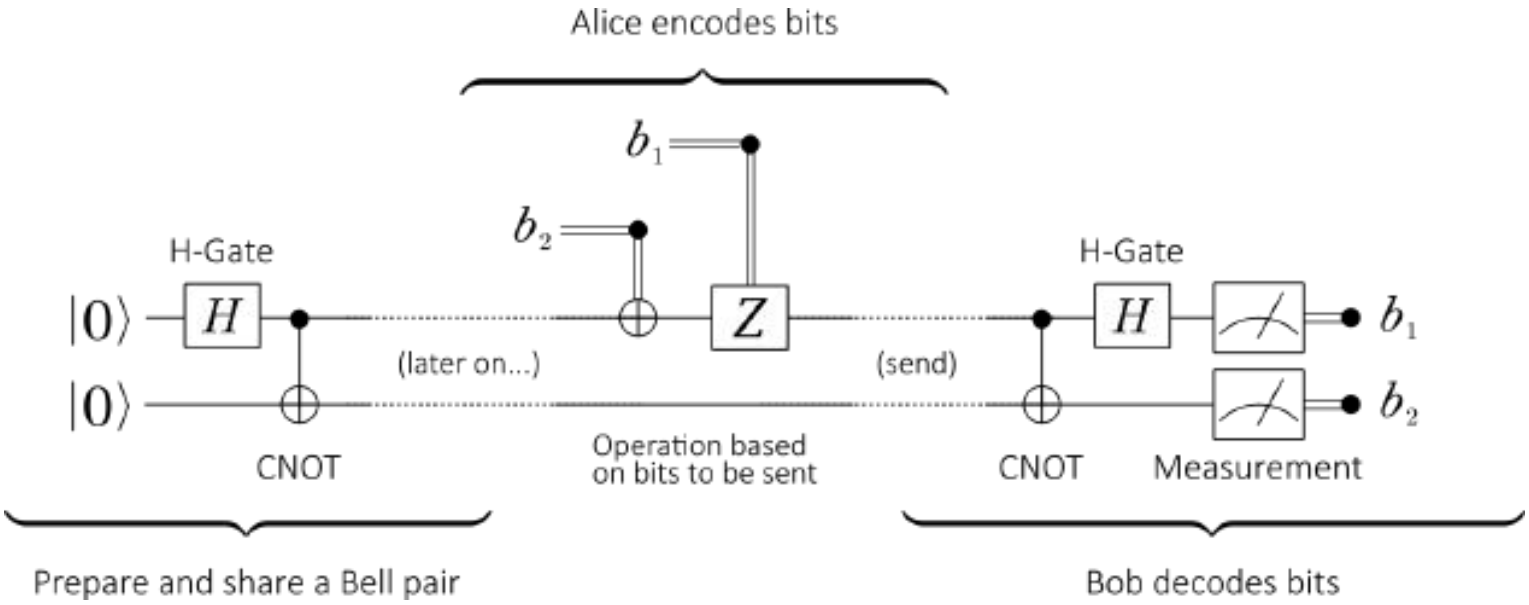

Image credits: www.quantum-bits.org

Superdense coding: Bob's part

- Bob receives Alice's qubit
- He applies a *CNOT* gate controlled by Alice's qubit
- He applies *H* to Alice's qubit
- He measures and recovers b_1 and b_2

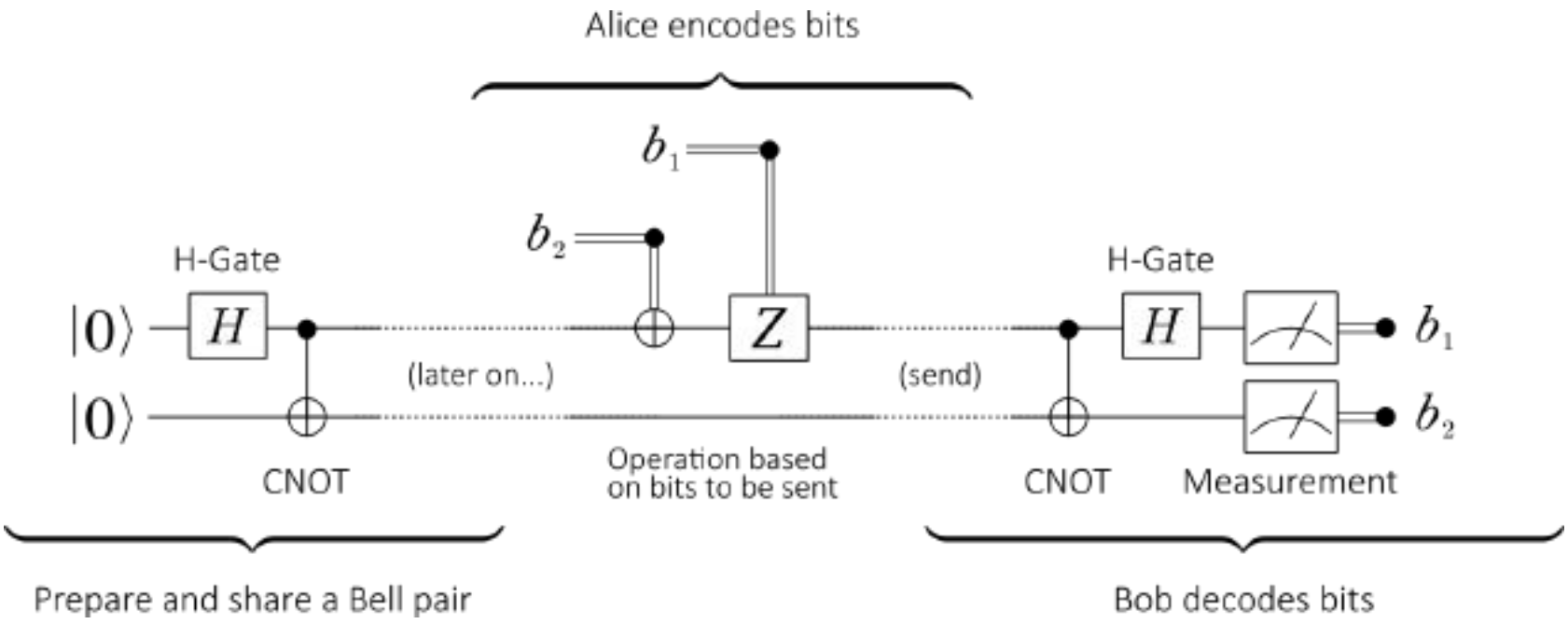

Image credits: www.quantum-bits.org

Superdense coding: an example

- Suppose Alice wants to send 11
- We start with $\frac{1}{\sqrt{2}}(|00\rangle + |11\rangle)$
- After Alice's operations, we will have $\frac{1}{\sqrt{2}}(|01\rangle - |10\rangle)$
- When Bob applies *CNOT* he obtains

$$\frac{1}{\sqrt{2}}(|01\rangle - |11\rangle) = \frac{1}{\sqrt{2}}(|0\rangle - |1\rangle)\,|1\rangle$$

- And with the *H* gate he gets $|11\rangle$ that now he can measure

Part VII

Deutsch's algorithm: the grandfather of all quantum algorithms

Deutsch's algorithm: statement of the problem

- In 1985, David Deutsch proposed a very simple algorithm that, nevertheless, hints at the capabilities of quantum computing
- The problem it solves is only of theoretical relevance and was later generalized in a joint work with Jozsa
- We are given a circuit (an **oracle**) that implements a one-bit boolean function and we are asked to determine whether the function is constant (returns the same value for all inputs) or balanced (returns 1 on one input and 0 on the other)
- Alternatively, we can think of the oracle as indexing a bit string of length two and we are asked to compute the XOR of the bits of the string
- In the classical case, we would need to consult the oracle twice, to compute both values of the function
- In the quantum case, we can make just one oracle call... but in superposition

Deutsch's algorithm: the oracle

- An oracle is treated as a black box, a circuit whose interior we cannot know
- This circuit computes, in a reversible way, a certain function f (in our case, of just one input)
- For the computation to be reversible, it uses as many inputs as outputs and "writes the result" with an XOR

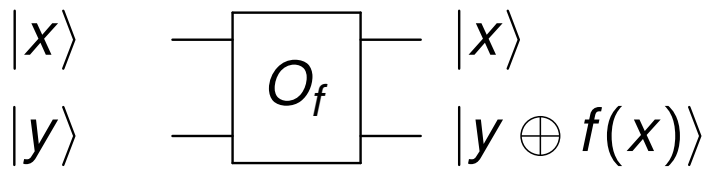

Deutsch's algorithm: the circuit

- The quantum circuit that we need to use to solve the problem is very simple

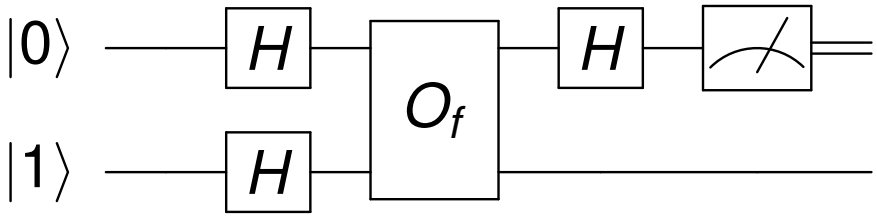

- If the function is constant, we will measure 0
- If the function is balanced, we will measure 1

Deutsch's algorithm: the magic

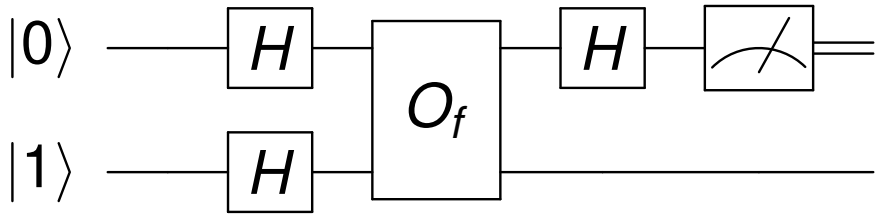

- The initial state is $|0\rangle\,|1\rangle$
- After the H the gates we have

$$\frac{(|0\rangle + |1\rangle)(|0\rangle - |1\rangle)}{2}$$

which is the same as

$$\frac{|0\rangle\,(|0\rangle - |1\rangle)}{2} + \frac{|1\rangle\,(|0\rangle - |1\rangle)}{2}$$

- When we apply the oracle, by linearity we obtain

$$\frac{|0\rangle\,(|0 \oplus f(0)\rangle - |1 \oplus f(0)\rangle)}{2} + \frac{|1\rangle\,(|0 \oplus f(1)\rangle - |1 \oplus f(1)\rangle)}{2}$$

Deutsch's algorithm: the magic (2)

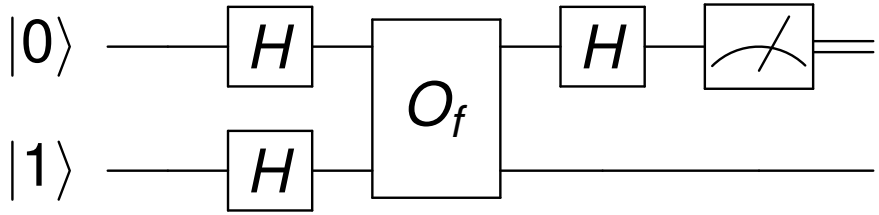

- If $f(0) = 0$, we have

$$|0 \oplus f(0)\rangle - |1 \oplus f(0)\rangle = |0\rangle - |1\rangle$$

- However, if $f(0) = 1$ we get

$$|0 + f(0)\rangle - |1 \oplus f(0)\rangle = |0 \oplus 1\rangle - |1 \oplus 1\rangle = |1\rangle - |0\rangle = -(|0\rangle - |1\rangle)$$

- For $f(1)$ the situation is the same so the global state is

$$\frac{(-1)^{f(0)}\,|0\rangle\,(|0\rangle - |1\rangle)}{2} + \frac{(-1)^{f(1)}\,|1\rangle\,(|0\rangle - |1\rangle)}{2}$$

Deutsch's algorithm: the magic (3)

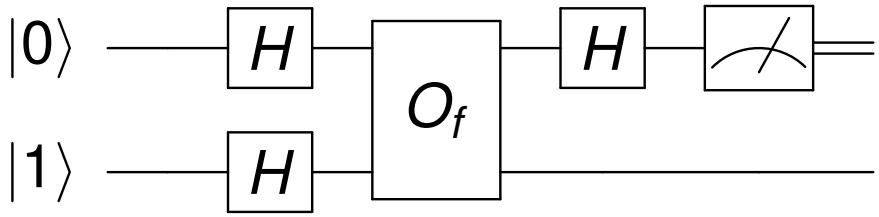

- We can also write that state as

$$\frac{|0\rangle\,(|0\rangle - |1\rangle)}{2} + \frac{(-1)^{f(0)+f(1)}\,|1\rangle\,(|0\rangle - |1\rangle)}{2}$$

- So if $f(0) = f(1)$, we will have

$$\frac{|0\rangle\,(|0\rangle - |1\rangle)}{2} + \frac{|1\rangle\,(|0\rangle - |1\rangle)}{2} = \frac{(|0\rangle + |1\rangle)(|0\rangle - |1\rangle)}{2}$$

  and when we apply the last H and measure we obtain 0.
- But if $f(0) \neq f(1)$, the state is

$$\frac{|0\rangle\,(|0\rangle - |1\rangle)}{2} - \frac{|1\rangle\,(|0\rangle - |1\rangle)}{2} = \frac{(|0\rangle - |1\rangle)(|0\rangle - |1\rangle)}{2}$$

  and, then, we obtain 1.

Deutsch's algorithm: some comments

- When we apply the oracle we have a phase kickback: we only act on one qubit, but it affects the whole state
- Deutch's algorithm exploits an interference phenomenon similar to that found in some physical experiments (double-slit experiment, Mach-Zender interferometer)

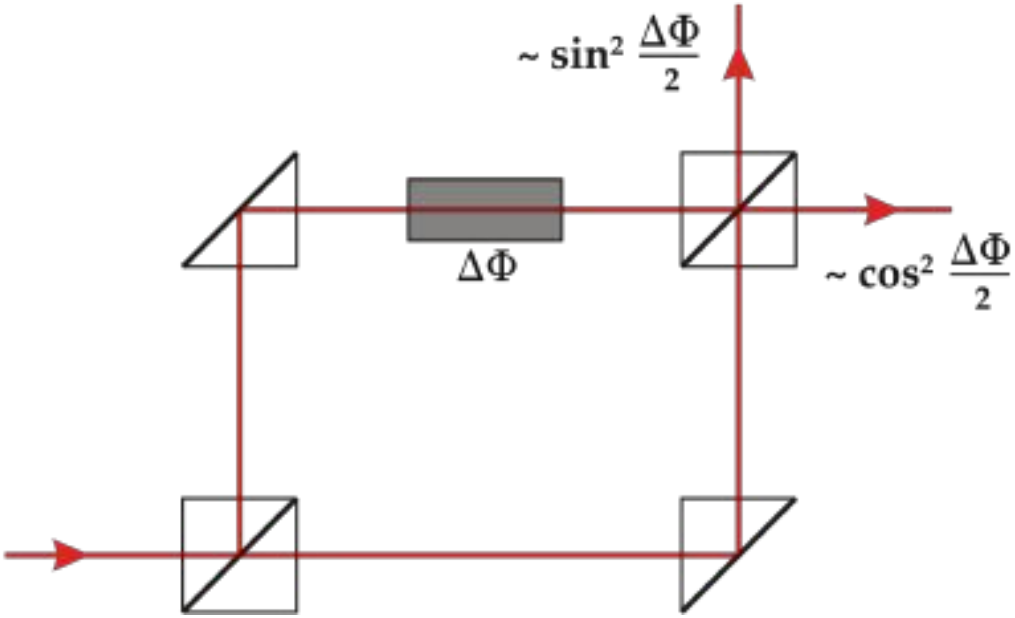

Image credits: Wikipedia

Part VIII

Multiqubit systems: growing up!

n-qubit systems

- Each of the n qubits can be in state $|0\rangle$ and $|1\rangle$
- Thus, for the n-qubit state we have 2^n possibilities:

$$|00\ldots0\rangle, |00\ldots1\rangle, \ldots, |11\ldots1\rangle$$

or simply

$$|0\rangle, |1\rangle, \ldots, \left|2^n - 1\right\rangle$$

- A generic state of the system will be

$$|\psi\rangle = \alpha_0 |0\rangle + \alpha_1 |1\rangle + \ldots + \alpha_{2^n-1} \left|2^n - 1\right\rangle$$

where α_i are complex numbers such that

$$\sum_{i=0}^{2^n-1} |\alpha_i|^2 = 1$$

Measuring a *n*-qubit state

- Suppose we have the *n*-qubit state

$$|\psi\rangle = \alpha_0 |0\rangle + \alpha_1 |1\rangle + \ldots + \alpha_{2^n-1} \left|2^n - 1\right\rangle$$

- If we measure all its qubits, we obtain:
  - 0 with probability $|\alpha_0|^2$ and the new state will be $|0\ldots00\rangle$
  - 1 with probability $|\alpha_1|^2$ and the new state will be $|0\ldots01\rangle$
  - $\ldots$
  - $2^n - 1$ with probability $|\alpha_{2^n-1}|^2$ and the new state will be $|1\ldots11\rangle$
- It is analogous to what we had with one and two qubits, but now with 2^n possibilities

Measuring one qubit in a n-qubit state

- We have

$$|\psi\rangle = \alpha_0 |0\rangle + \alpha_1 |1\rangle + \ldots + \alpha_{2^n-1} \left|2^n - 1\right\rangle$$

- If we measure the j-th qubit
  - We will get 0 with probability

$$\sum_{i \in I_0} |\alpha_i|^2$$

    where I_0 is the set of numbers whose j-th bit is 0
  - In that case, the new state $|\psi\rangle$ will be

$$\frac{\sum_{i \in I_0} \alpha_i |i\rangle}{\sqrt{\sum_{i \in I_0} |\alpha_i|^2}}$$

  - The case in which we obtain 1 is analogous

n-qubit quantum gates

- A n-qubit state is

$$|\psi\rangle = \alpha_0 |0\rangle + \alpha_1 |1\rangle + \ldots + \alpha_{2^n-1} \left|2^n - 1\right\rangle$$

- We can represent it by

$$\begin{pmatrix} \alpha_0 \\ \alpha_1 \\ \alpha_2 \\ \vdots \\ \alpha_{2^n-1} \end{pmatrix}$$

- To compute inner products with Dirac notation we only need to note that

$$\langle i|j\rangle = \delta_{ij}$$

- Thus, a n-qubit quantum gate is a unitary matrix U of size $2^n \times 2^n$

The Toffoli gate

- The Toffoli gate (or *CCNOT*) is a 3-qubit gate. Thus, it can be represented as a 8×8 matrix
- Its action on elements $x, y, z \in \{0, 1\}$ is:

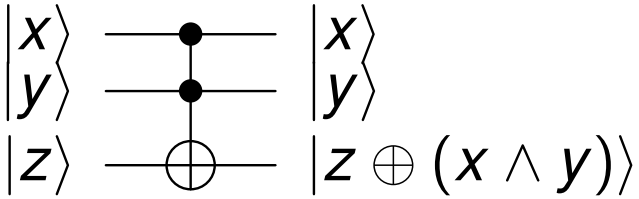

- The Toffoli gate is **universal for classical logic**, and thus **any classical circuit can be simulated with a quantum circuit**
- However, the Toffoli gate, on its own, **is not universal for quantum computing** (and it is not even necessary, because it can be simualted with one and two-qubit gates)

Universal gates in quantum computing

- The number of quantum gates (even for a single qubit) is uncountably infinite. Thus, no finite set of gates is universal in the classical sense
- However, we can obtain finite sets of gates that allow us to **approximate** any other gate as much as we want

Theorem

The one-qubit gates together with the CNOT gate are universal for quantum computing

Theorem

The gates X, H, T and CNOT are universal for quantum computing

Gate equivalences

$$-\boxed{Z}- \quad = \quad -\boxed{H}-\boxed{X}-\boxed{H}-$$

$$-\boxed{S}- \quad = \quad -\boxed{T}-\boxed{T}-$$

$$-\boxed{Y}- \quad = \quad -\boxed{Z}-\boxed{X}-\boxed{S}-\boxed{X}-\boxed{S}-\boxed{X}-$$

$$-\boxed{T^\dagger}- \quad = \quad -\boxed{S}-\boxed{S}-\boxed{S}-\boxed{T}$$

$$-\boxed{S^\dagger}- \quad = \quad -\boxed{S}-\boxed{S}-\boxed{S}$$

However, Z, S, Y, $S^\dagger$ and $T^\dagger$ are usually included among the available gates in most quantum computers (such as the ones in the IBM Q Experience).

Equivalence of the Toffoli gate

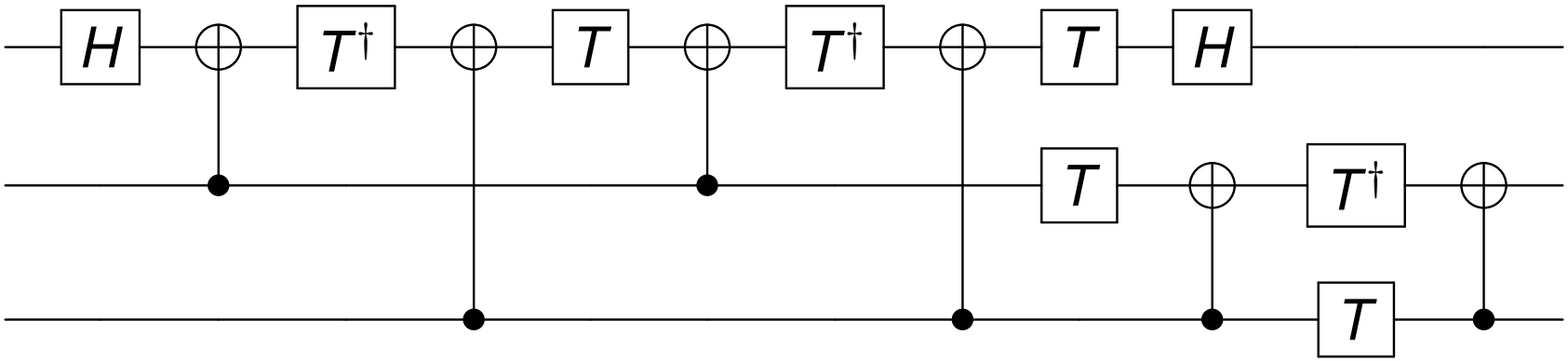

Part IX

Everything you always wanted to know about quantum parallelism but were afraid to ask

Urban legends about quantum parallelism

- But... don't quantum computers try all 2^n possibilities in parallel?
- The answer is... yes *and* no (this is *quantum* computing after all!)

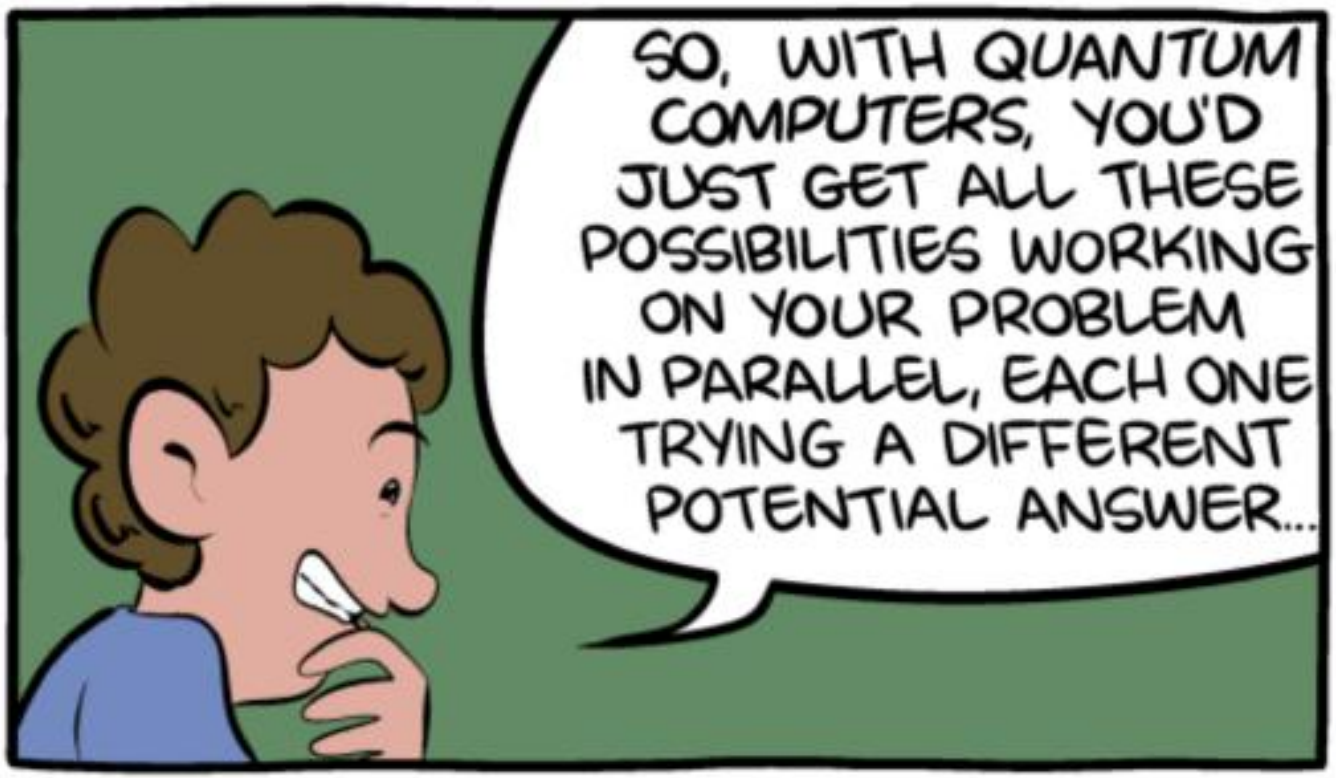

Image credits: The Talk, by Scott Aaronson and Zach Weinersmith

Evaluating a function: querying the oracle

- As we know, in quantum computing every gate is reversible
- To compute a function f we keep the inputs unchanged and xor the result to the output qubits
- This type of circuit is called and oracle for f (we already used an oracle for a one-bit function in Deutsch algorithm)

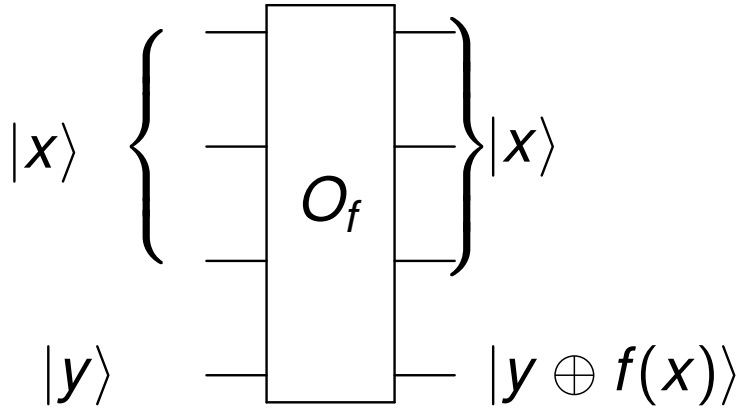

Evaluating a function in parallel: the superposition hocus-pocus

- Suppose that we have an oracle O_f for a function $f(x)$ with a one-bit input
- We know that, using the H gate, we can put a qubit in superposition
- If we start with the state $|0\rangle |0\rangle$ and we apply H on the first qubit, we will have

$$\frac{1}{\sqrt{2}} |0\rangle |0\rangle + \frac{1}{\sqrt{2}} |1\rangle |0\rangle$$

- If we now apply O_f, by linearity we have

$$\frac{1}{\sqrt{2}} |0\rangle |f(0)\rangle + \frac{1}{\sqrt{2}} |1\rangle |f(1)\rangle$$

- We have evaluated the function on two different inputs with just one call!

Evaluating a function in parallel: the tensor-product abracadabra

- We can do something similar with a function $f(x_1, x_2, \ldots, x_n)$ on n-variables by using the following circuit

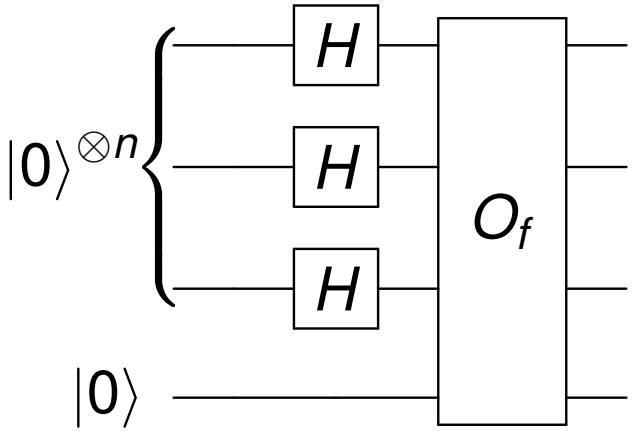

- When we apply the H gates we obtain

$$\frac{(|0\rangle + |1\rangle)(|0\rangle + |1\rangle)\cdots(|0\rangle + |1\rangle)\,|0\rangle}{\sqrt{2^n}}$$

Evaluating a function in parallel: the tensor-product abracadabra (2)

- If we expand the product we get

$$\frac{(|0\ldots0\rangle + |0\ldots1\rangle + \ldots + |1\ldots1\rangle)\,|0\rangle}{\sqrt{2^n}} = \frac{1}{\sqrt{2^n}} \sum_{x=0}^{2^n-1} |x\rangle\,|0\rangle$$

- And, when we apply the oracle, we will get the state

$$\frac{1}{\sqrt{2^n}} \sum_{x=0}^{2^n-1} |x\rangle\,|f(x)\rangle$$

- An exponential number of function evaluations with just one call!

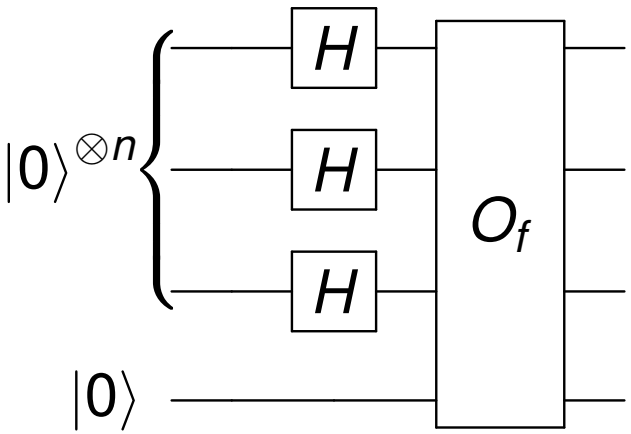

All that glitters ain't gold

- And now... how do we retrieve the values $f(x)$?
- To obtain a result, we need to perform a measurement
- But then we will get a state of the form

$$|c\rangle\,|f(c)\rangle$$

- That is, we only obtain the result of the function for a randomly chosen input (this may be even worse than classically evaluating the function)

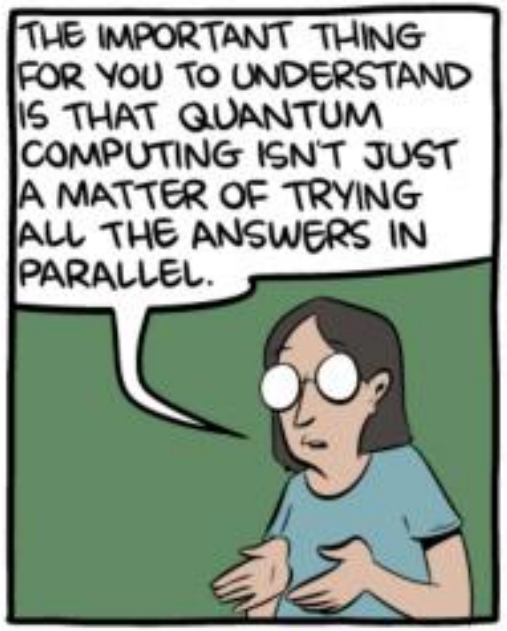

Image credits: The Talk, by Scott Aaronson and Zach Weinersmith

Interferences come to the rescue

- How can we use the 2^n evaluations to extract useful information?
- One possibility is... to produce interferences!
- The amplitudes of some states can be negative
- If we manage to “annihilitate” the amplitudes of states we are not interested in, the probability of obtaining the answer we need will grow
- This is, in general, no easy task, but we know how to achieve it in some interesting cases

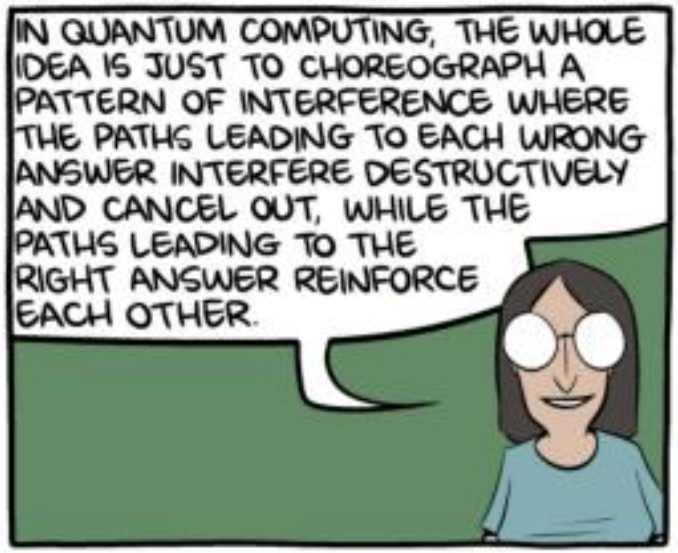

Image credits: The Talk, by Scott Aaronson and Zach Weinersmith